FURUNO

OPERATOR'S MANUAL

NAVTEX RECEIVER

Model **NX-300**

FURUNO ELECTRIC CO., LTD.

www.furuno.com

(Elemental Chlorine Free)

The paper used in this manual
is elemental chlorine free.

FURUNO ELECTRIC CO., LTD.

9-52 Ashihara-cho,
Nishinomiya, 662-8580, JAPAN

・FURUNO Authorized Distributor/Dealer

All rights reserved. Printed in Japan

A : MAR. 2000
M3 : APR. 26, 2017

Pub. No. OME-56290-M3

(ETMI) NX-300

0 0 0 8 0 9 0 0 0 1 5

IMPORTANT NOTICES

General

- This manual has been authored with simplified grammar, to meet the needs of international users.
- The operator of this equipment must read and follow the descriptions in this manual. Wrong operation or maintenance can cancel the warranty or cause injury.
- Do not copy any part of this manual without written permission from FURUNO.
- If this manual is lost or worn, contact your dealer about replacement.
- The contents of this manual and equipment specifications can change without notice.
- The example screens (or illustrations) shown in this manual can be different from the screens you see on your display. The screens you see depend on your system configuration and equipment settings.
- Save this manual for future reference.
- Any modification of the equipment (including software) by persons not authorized by FURUNO will cancel the warranty.
- The following concern acts as our importer in Europe, as defined in DECISION No 768/2008/EC.
  - Name: FURUNO EUROPE B.V.
  - Address: Ridderhaven 19B, 2984 BT Ridderkerk, The Netherlands
- All brand and product names are trademarks, registered trademarks or service marks of their respective holders.

How to discard this product

Discard this product according to local regulations for the disposal of industrial waste. For disposal in the USA, see the homepage of the Electronics Industries Alliance (http://www.eiae.org/) for the correct method of disposal.

How to discard a used battery

Some FURUNO products have a battery(ies). To see if your product has a battery, see the chapter on Maintenance. Follow the instructions below if a battery is used. Tape the + and - terminals of battery before disposal to prevent fire, heat generation caused by short circuit.

In the European Union

The crossed-out trash can symbol indicates that all types of batteries must not be discarded in standard trash, or at a trash site. Take the used batteries to a battery collection site according to your national legislation and the Batteries Directive 2006/66/EU.

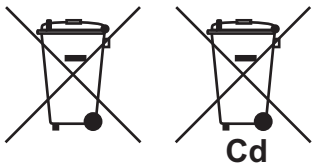

In the USA

The Mobius loop symbol (three chasing arrows) indicates that Ni-Cd and lead-acid rechargeable batteries must be recycled. Take the used batteries to a battery collection site according to local laws.

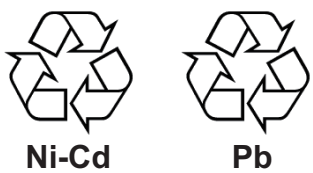

In the other countries

There are no international standards for the battery recycle symbol. The number of symbols can increase when the other countries make their own recycling symbols in the future.

⚠ SAFETY INSTRUCTIONS

Safety Instructions for the Operator

⚠ WARNING

Do not open the cover of the equipment.

Only qualified personnel should work inside the equipment.

Immediately turn off the power at the ship's mains switchboard if water or foreign object falls into the equipment or the equipment is emitting smoke or fire.

Continued use of the equipment can cause fire, electrical shock and serious injury.

Do not disassemble or modify the equipment.

Fire, electrical shock or serious injury can result.

⚠ CAUTION

Keep heater away from equipment.

A heater can melt the equipment's power cord, which can cause fire or electrical shock.

Use the proper fuse.

Use of the wrong fuse can cause fire or equipment damage.

Do not operate the equipment with wet hands.

Electrical shock can result.

Safety Instructions for the Installer

⚠ WARNING

Do not open the cover unless totally familiar with electrical circuits and service manual.

Improper handling can result in electrical shock.

Turn off the power at the ship's mains switchboard before beginning the installation. Post a warning sign near the switchboard to ensure that the power will not be applied while the equipment is being installed.

Serious injury or death can result if the power is not turned off, or is applied while the equipment is being installed.

⚠ CAUTION

Ground the equipment to prevent mutual interference.

Confirm that power supply voltage is compatible with the voltage rating of the equipment.

Connection to the wrong power supply can cause fire or equipment damage. The voltage rating appears on the label at the rear of the equipment.

Observe the following compass safe distances to prevent interference to a magnetic compass:

	Standard compass	Steering compass
NX-300	0.5 m	0.3 m

CONTENTS

FOREWORD ..... **vi**

A Word to NX-300 Owners vi

Features vii

SYSTEM CONFIGURATION ..... **viii**

EQUIPMENT LISTS ..... **ix**

1. PRINCIPLE OF NAVTEX SYSTEM **1-1**

1.1 How NAVTEX Works 1-1

1.2 NAVTEX System Operation 1-1

1.3 Message Format 1-2

1.4 Display Indications 1-3

1.5 NAVTEX Station Map 1-4

1.6 NAVTEX Station List 1-5

2. OPERATION **2-1**

2.1 Control Description 2-1

2.2 Turning the Power On/Off 2-1

2.3 Adjusting Dimmer and Contrast 2-2

2.4 Menu Operation Overview 2-2

2.5 Selecting Stations 2-3

2.6 Selecting Messages 2-4

2.7 Setting Functions (FUNCTIONS menu) 2-5

2.8 Selecting Language 2-9

2.9 Displaying Messages 2-9

2.10 Sample Messages 2-10

2.11 Displaying Navigation Data 2-11

2.12 Selecting Receive Frequency 2-12

3. SYSTEM MENU **3-1**

3.1 Units of Measurement 3-1

3.2 Time Difference (using local time) 3-2

3.3 Time Display 3-3

3.4 Default Setting 3-3

3.5 Delete All Messages 3-4
3.6 User Display of Navigation Data 3-4

4. OTHER FUNCTIONS 4-1

4.1 DEMO Mode 4-1
4.2 VIEW Mode 4-1
4.3 All Clear 4-1
4.4 Changing Received Message Log Window 4-2

5. MAINTENANCE & TROUBLESHOOTING 5-1

5.1 Maintenance 5-1
5.2 Diagnostic Test 5-1
5.3 When the Battery Icon Appears 5-2
5.4 Replacement of Fuse 5-3

6. INSTALLATION 6-1

6.1 Installation of Display Unit 6-1
6.2 Installation of Antenna Unit 6-2
6.3 Wiring 6-3
6.4 Interfacing 6-4

MENU TREE AP-1

SPECIFICATIONS SP-1

PACKING LIST A-1

OUTLINE DRAWINGS D-1

INTERCONNECTION DIAGRAM S-1

INDEX index-1

A Word to NX-300 Owners

Congratulations on your choice of the FURUNO NX-300 NAVTEX Receiver. We are confident that you will enjoy many years of operation with this fine piece of equipment.

Since 1948, FURUNO Electric Company has enjoyed an enviable reputation for quality and reliability throughout the world. Our extensive global network of agents and dealers furthers this dedication to excellence.

The NX-300 is just one of the many FURUNO developments in the field of marine radio communication. The NX-300 provides cost-effective price, high sensitivity and simple operation in one compact and light-weight unit. In addition to its fundamental function of receiving NAVTEX broadcasts, this unit can also function as nav data display when connected to navigation equipment.

This unit is designed and constructed to ensure the user many years of trouble-free operation. To obtain full performance from the equipment, however, you should carefully read and follow the recommended procedures for installation, operation and maintenance. No machine can perform its intended functions unless it is installed and maintained properly.

Thank you for considering and purchasing FURUNO equipment.

For SOLAS vessels and ships

Subject to formal inspection we recommend our NX-700 NAVTEX Receiver which meets the full requirements of IMO Resolution MSC.148(77).

Features

NAVTEX (Navigational Telex) is a worldwide coastal telex broadcasting system. Coastal NAVTEX broadcasting stations with specific ID's transmit Navigational warnings, Meteorological warnings, Search and Rescue (SAR) information and other navigational information for NAVTEX receiver-equipped vessels sailing in coastal waters.

The FURUNO NX-300 NAVTEX receiver receives NAVTEX messages and automatically displays them together with station ID and message category information.

The service range of a NAVTEX station is typically 200-400 nautical miles. A NAVTEX station normally broadcasts every 4 hours.

The NAVTEX message is relevant for all types and sizes of vessels. The NX-300 is shipped from the factory equipped to receive 7 specific types of NAVTEX messages from all NAVTEX stations. However unnecessary stations can be rejected or necessary stations can be added by the "manual station selection" facility.

If ship's position data is fed from navigation equipment, the NX-300 automatically decides in which NAVAREA the vessel is navigating, and selects stations. (NAVAREAs are geographical zones defined by the International Maritime Organization.)

- Unattended operation once required data is entered.
- Received data is not saved nor displayed when the error rate exceeds the percentage you set (max 39%).
- No paper required
- Designed for voluntary carriage on recreational craft and small workboats
- Compact, stylish display and antenna units
- Memory of up to 28,000 characters for last 72 hours
- Navigation data can be fed through external input (connection with navigation aid required).
- Bright 95 x 60 mm LCD with adjustable contrast and brilliance
- Memory backup with a long-life lithium battery
- Low power consumption

Program No.

0850191-01.**
** denotes minor modifications.

CE declaration

With regards to CE declarations, please refer to our website (www.furuno.com), for further information about RoHS conformity declarations.

SYSTEM CONFIGURATION

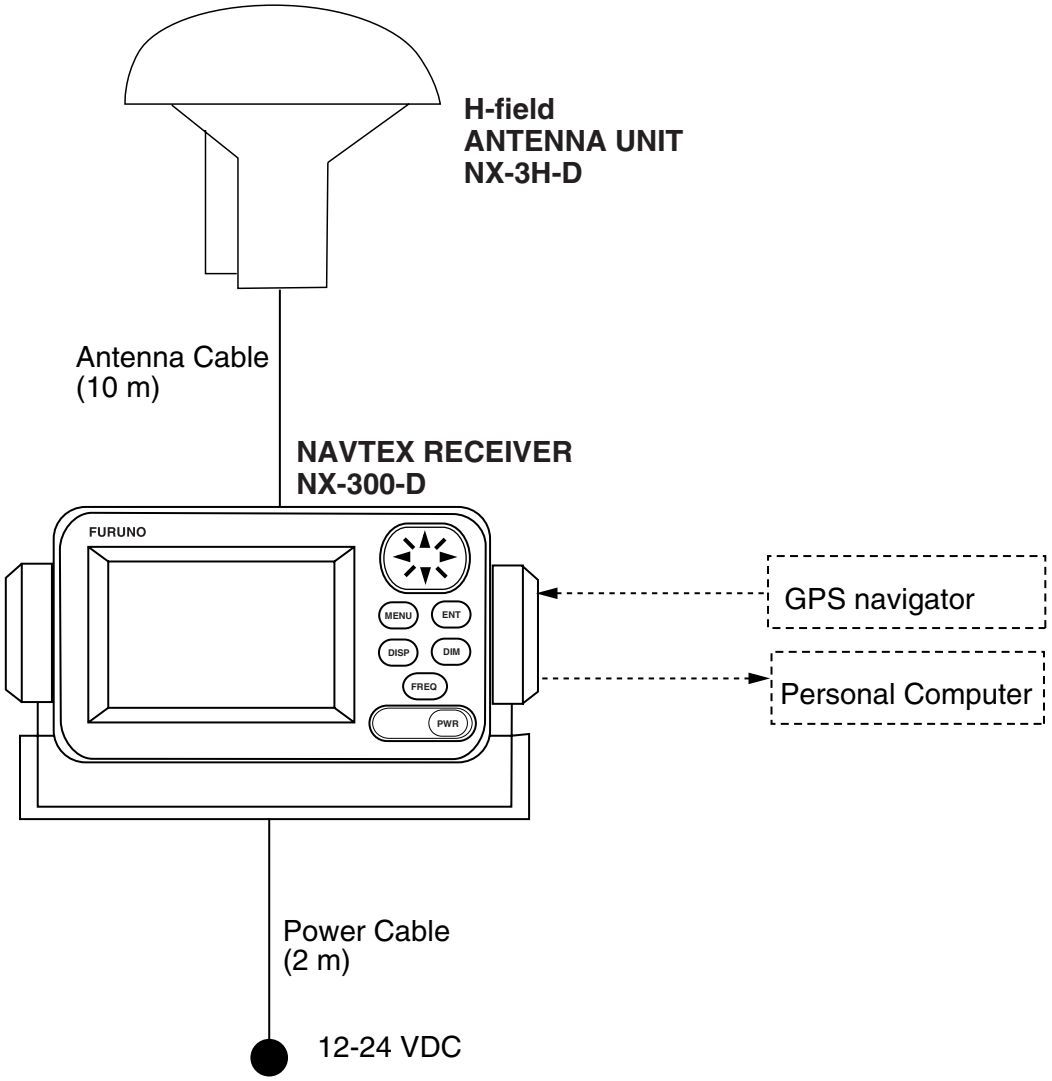

NX-300 System configuration

EQUIPMENT LISTS

Standard supply

Name	Type	Code No.	Qty	Remarks
NAVTEX Receiver	NX-300-D	-	1	Including hanger and knob bolts
Antenna Unit	NX-3H-D	-	1	H-field type with 10 m cable
Installation Materials	CP08-02200	000-015-917	1 set	w/inst. mat. CP08-02201, cable assy.: MJ-A7SPF0009-020C
Spare Parts	SP08-02401	001-072-500	1 set	Fuse: FGMB 125V 1A PBF, 2pcs.
Accessories	FP14-02801	001-057-060	1 set	Hard cover: 20-016-1091

Optional equipment

Name	Type	Code No.	Remarks
Antenna Unit	NX-3H-D	-	H-field type with 10 m cable
Right Angle Antenna Base	No.13-QA330	001-111-910-10	For antenna unit
L-angle Antenna Base	No.13-QA310	001-111-900-10	
Handrail Antenna Base	No.13-RC5160	001-111-920-10	
Mast Mount Kit	CP20-01111	004-365-780	
Flush Mount Kit S	OP20-17	000-040-720	For flush mounting the NAVTEX receiver
Flush Mount Kit F	OP20-29	000-041-405	

This page intentionally left blank.

1. PRINCIPLE OF NAVTEX SYSTEM

1.1 How NAVTEX Works

There are many types of navigational and meteorological information available on radio, such as NAVAREA, HYDROPAC, etc. However, these systems rely heavily upon the operator's experience and skill in tuning the radio and interpreting messages. In addition, constant monitoring to pick up wanted information among a vast volume of messages is not practical with a limited radio staff.

To provide all mariners with up-to-the-minute information automatically, the NAVTEX system was developed.

NAVTEX is an acronym meaning Navigational Telex, and as its name shows, it is a kind of narrow band radio teletype system for sending (by frequency shift keying) text messages expressed in a 7-unit code. The difference is that a NAVTEX transmitter transmits nine control characters (header code) ahead of the main message, so that the receiver can identify the station, message type and serial number automatically.

1.2 NAVTEX System Operation

For navigation purposes, the world is divided into 21 areas (called Navareas). Each Navarea has multiple NAVTEX stations and each NAVTEX station has an identification code, from "A" to "Z." The frequency assigned to NAVTEX is only one (518 kHz), and many stations exist in the same Navarea. (Some stations use 490 kHz also.)

If the stations were to transmit without any rule, the system would collapse due to mutual interference. To avoid this problem, the following rules apply.

- The transmission schedule is determined so that two or more stations having a common service area may not overlap in time.
- Each station transmits with minimum required power to cover its service area (200 nautical miles nominal).

1.3 Message Format

For automatic identification of messages, each message starts with eight control characters, called "Header codes".

The first four characters are always "ZCZC" and common to all messages. This part is used for message synchronization. The latter four characters are designated as b1, b2, b3 and b4 to indicate origin, category and serial number of the message.

Character b1 is the identification letter of the NAVTEX station; "A" to "Z". Character b2 indicates the type of message, "A" to "Z", as listed below. Character b3 and b4 indicate the serial number of the message. The serial numbers are counted up from "01" to "99", and start from "01" again. Number "00" is specially reserved for important emergency messages, such as a search and rescue (SAR) message.

The end of each message is indicated by "NNNN" (four successive N's).

General message format is summarized below.

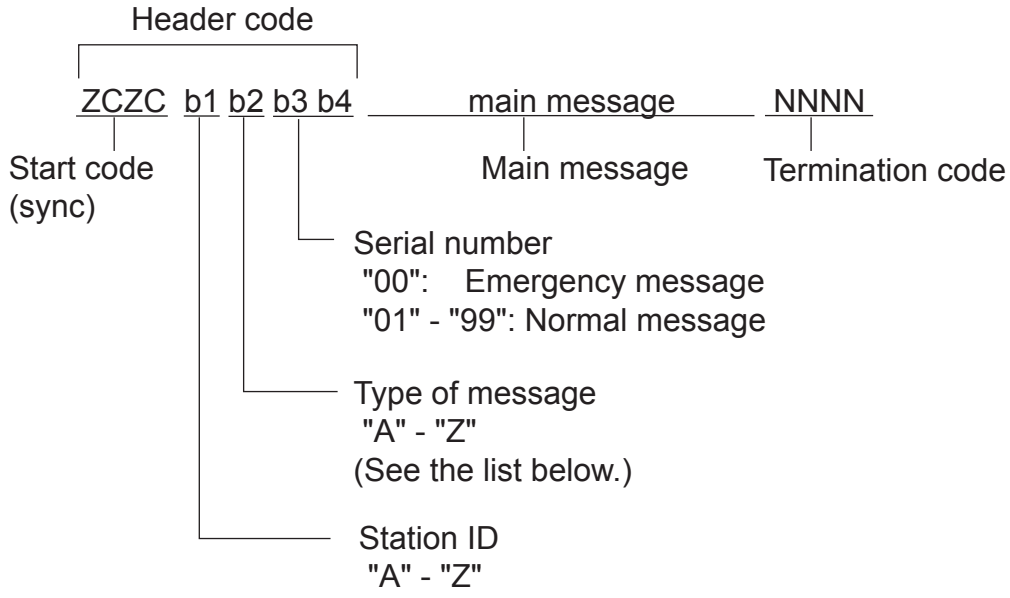

[Type of message (category)]

A:	Navigational warning	I:	Reserve-presently not used
B:	Meteorological warning	J:	Differential OMEGA message
C:	Ice report	K:	Other electronic navigational aid system message
D:	Search and rescue information/ piracy and armed robbery	L:	Navigational warning (additional)
E:	Meteorological forecast	M to U:	Reserve-presently not used
F:	Pilot message	V:	Notice to Fishermen (U. S. only)
G:	AIS service message	W to Y	Reserve-presently not used
	(non navigational aid)	Z:	QRU (no message on hand)
H:	LORAN-C message		

1.4 Display Indications

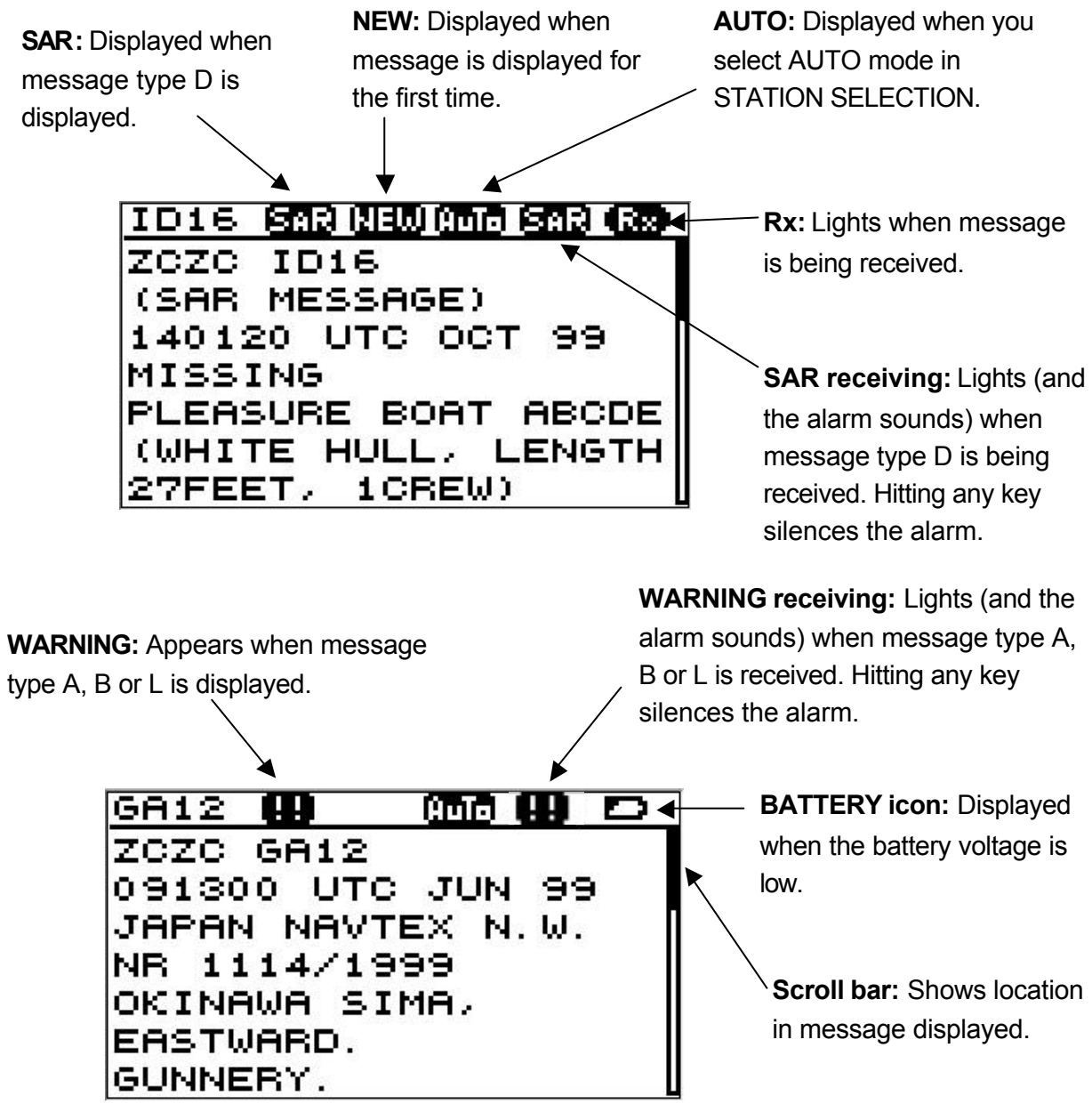

Figure 1-2 Display indications

1.5 NAVTEX Station Map

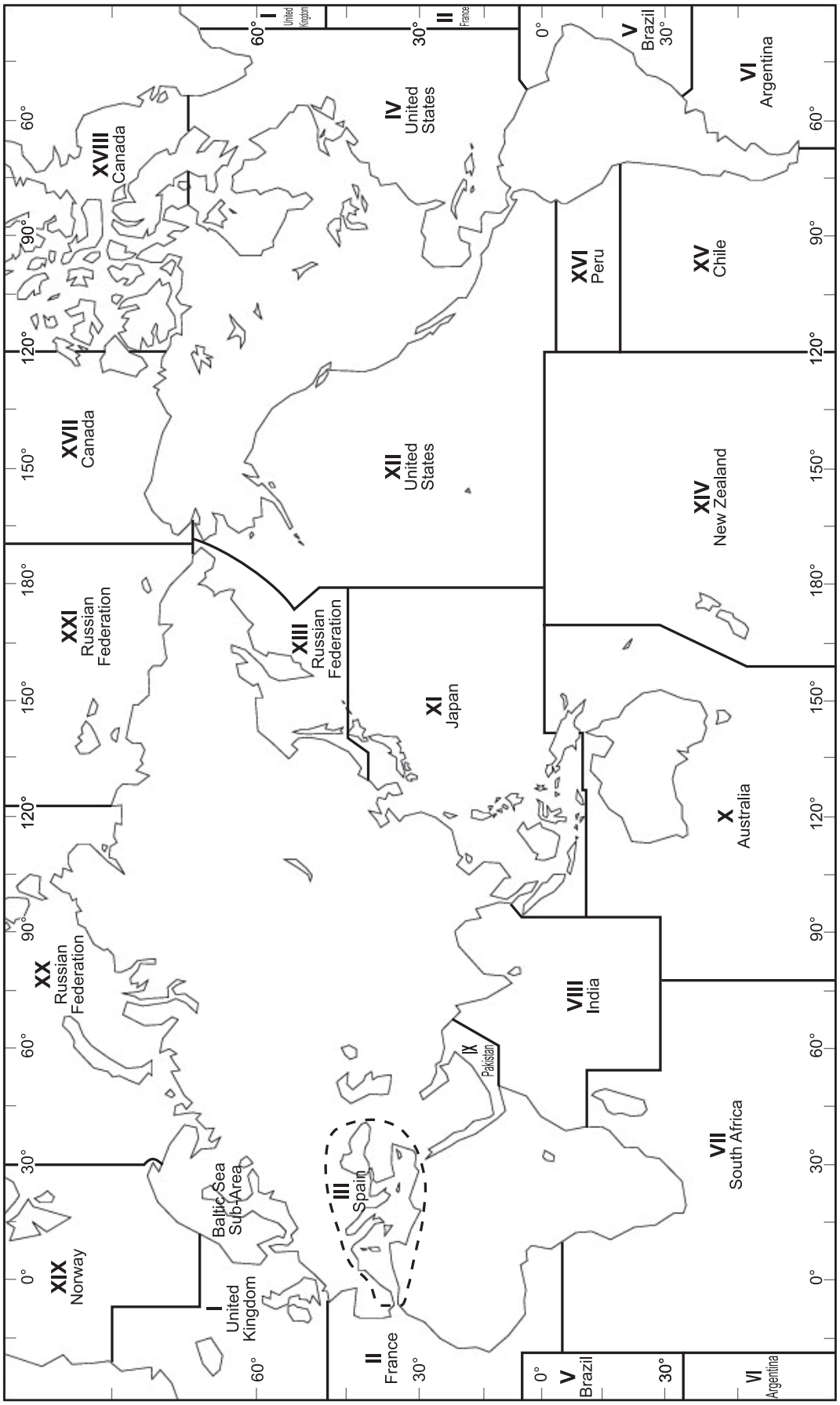

1.6 NAVTEX Station List

NAV area	Country	Station	Latitude	Longitude	Freq. (kHz)	Area (nm)	Station ID	Broadcast schedule (UTC)
I	Belgium	Oostende	51° 11' N	002° 48' E	518	55	V	0330, 0730, 1130, 1530, 1930, 2330
							T	0310, 0710, 1110, 1510, 1910, 2310
					490		B	0010, 0410, 0810, 1210, 1610, 2010
	Estonia	Tallinn	59° 28' N	024° 21' E	518	250	U	0320, 0720, 1120, 1520, 1920, 2320
	Foroyar (Denmark)	Torshavn	62° 01' N	006° 48' W	518	250	D	0030, 0430, 0830, 1230, 1630, 2030
	Germany	Hamburg	53° 40' N	009° 48' E	518	400	S	0300, 0700, 1100, 1500, 1900, 2300
					490		L	0150, 0550, 0950, 1350, 1750, 2150
	Iceland	Grindavik	63° 47' N	022° 31' W	518	550	X	0350, 0750, 1150, 1550, 1950, 2350
					490		K	0140, 0540, 0940, 1340, 1740, 2140
		Reykjavik Radio	64° 05' N	021° 51' W	518	550	R	0250, 0650, 1050, 1450, 1850, 2250
					490		R	0320, 0720, 1120, 1520, 1920, 2320
		Saudanes	66° 11' N	018° 57' W	490	550	E	0040, 0440, 0840, 1240, 1640, 2040
	Ireland	Valencia	51° 56' N	010° 21' W	518	400	W	0340, 0740, 1140, 1540, 1940, 2340
		Malin Head	55° 22' N	007° 21' W	518	400	Q	0240, 0640, 1040, 1440, 1840, 2240
	Netherlands	Den Helder	52° 06' N	004° 15' E	518	110	P	0230, 0630, 1030, 1430, 1830, 2230
	Norway	Rogaland Radio	58° 48' N	005° 34' E	518	450	L	0150, 0550, 0950, 1350, 1750, 2150
		Orlandet	63° 40' N	009° 33' E	518	450	N	0210, 0610, 1010, 1410, 1810, 2210
		Tjome (Jeloya)	59° 26' N	010° 34' E	518	450	M	2000, 0600, 1000, 1400, 1800, 2200
	Sweden	Bjuroklubb	64° 28' N	021° 35' E	518	300	H	0110, 0510, 0910, 1310, 1710, 2110
		Gislovshammar	55° 29' N	014° 19' E	518	300	J	0130, 0530, 0930, 1330, 1730, 2130
		Grimeton	57° 06' N	012° 23' E	518	300	I	0120, 0520, 0920, 1320, 1720, 2120
	United Kingdom	Cullercoats	55° 02' N	001° 26' W	518	270	G	0100, 0500, 0900, 1300, 1700, 2100
					490		U	0320, 0720, 1120, 1520, 1920, 2320
		Portpatrick	54° 51' N	005° 07' W	518	270	O	0220, 0620, 1020, 1420, 1820, 2220
					490		C	0020, 0420, 0820, 1220, 1620, 2020
		Niton	50° 35' N	001° 18' W	518	270	E	0040, 0440, 0840, 1240, 1640, 2040
							K	0140, 0540, 0940, 1340, 1740, 2140
					490		I	0120, 0520, 0920, 1320, 1720, 2120
							T	0310, 0710, 1110, 1510, 1910, 2310

(Continued on next page)

NAV area	Country	Station	Latitude	Longitude	Freq. (kHz)	Area (nm)	Station ID	Broadcast schedule (UTC)
II	Cape Verde	Sao Vicente	16° 51' N	025° 00' W	518	250	U	0320, 0720, 1120, 1520, 1920, 2320
					490		P	0310, 0710, 1110, 1510, 1910, 2310
	France	Corsen	48° 28' N	005° 03' W	518	300	A	0000, 0400, 0800, 1200, 1600, 2000
					490		E	0040, 0440, 0840, 1240, 1640, 2040
	Morocco	Casablanca Radio	33° 36' N	007° 38' W	518	400	M	0200, 0600, 1000, 1400, 1800, 2200
	Portugal	Horta	38° 32' N	028° 38' W	518	640	F	0050, 0450, 0850, 1250, 1650, 2050
					490		J	0130, 0530, 0930, 1330, 1730, 2130
		Monsanto	38° 44' N	009° 11' W	518	530	R	0250, 0650, 1050, 1450, 1850, 2250
					490		G	0100, 0500, 0900, 1300, 1700, 2100
	Senegal	Dakar	14° 46' N	017° 21' E	518	200	C	0020, 0420, 0820, 1220, 1620, 2020
					490		M	0200, 0600, 1000, 1400, 1800, 2200
	Spain	Coruna	43° 21' N	008° 27' W	518	400	D	0030, 0430, 0830, 1230, 1630, 2030
					490		W	0340, 0740, 1140, 1540, 1940, 2340
		Las Palmas	28° 10' N	015° 25' W	518	400	I	0120, 0520, 0920, 1320, 1720, 2120
					490		A	0000, 0400, 0800, 1200, 1600, 2000
		Tarifa	36° 01' N	005° 34' W	518	400	G	0100, 0500, 0900, 1300, 1700, 2100
					490		T	0310, 0710, 1110, 1510, 1910, 2310
III	Algeria	Algiers	36° 44' N	003° 10' E	518	250	B	0010, 0410, 0810, 1210, 1610, 2010
					490		V	0330, 0730, 1130, 1530, 1930, 2330
	Bulgaria	Varna	43° 04' N	027° 46' E	518	350	J	0130, 0530, 0930, 1330, 1730, 2130
	Croatia	Split	43° 30' N	016° 29' E	518	85	Q	0240, 0640, 1040, 1440, 1840, 2240
	Cyprus	Cyprus	35° 03' N	033° 17' E	518	200	M	0200, 0600, 1000, 1400, 1800, 2200
	Egypt	Alexandria	31° 12' N	029° 52' E	518	350	N	0210, 0610, 1010, 1410, 1810, 2210
	France	La Garde	43° 06' N	005° 59' E	518	250	W	0340, 0740, 1140, 1540, 1940, 2340
					490		S	0300, 0700, 1100, 1500, 1900, 2300
	Greece	Iraklion	35° 20' N	025° 07' E	518	280	H	0110, 0510, 0910, 1310, 1710, 2110
		Kerkyra	39° 37' N	019° 55' E	518	280	K	0140, 0540, 0940, 1340, 1740, 2140
		Limnos	39° 52' N	025° 04' E	518	280	L	0150, 0550, 0950, 1350, 1750, 2150
	Iran	Now Shahr	36° 42' N	052° 33' E	490	250	J	0130, 0530, 0930, 1330, 1730, 2130
	Israel	Haifa	32° 49' N	035° 00' E	518	200	P	0020, 0420, 0820, 1220, 1620, 2020

(Continued on next page)

NAV area	Country	Station	Latitude	Longitude	Freq. (kHz)	Area (nm)	Station ID	Broadcast schedule (UTC)
III	Italy	La Maddalena	41° 13' N	009° 23' E	518	400	R	0250, 0650, 1050, 1450, 1850, 2250
					490		I	0120, 0520, 0920, 1320, 1720, 2120
		Sellia Marina	38° 52' N	016° 43' E	518	400	V	0330, 0730, 1130, 1530, 1930, 2330
					490		W	0340, 0740, 1140, 1540, 1940, 2340
		Mondolfo	43° 44' N	013° 08' E	518	400	U	0320, 0720, 1120, 1520, 1920, 2320
					490		E	0040, 0440, 0840, 1240, 1640, 2040
		Tunis	36° 53' N	010° 11' E	518	400	T	0310, 0710, 1110, 1510, 1910, 2310
	Malta	Malta	35° 49' N	014° 32' E	518	400	O	0220, 0620, 1020, 1420, 1820, 2220
	Romania	Constanta	44° 06' N	028° 37' E	490	400	L	0550, 0950, 1350, 1750, 2150, 0150
	Russia	Astrakhan	45° 47' N	047° 33' E	518	250	W	0340, 0740, 1140, 1540, 1940, 2340
		Novorossiysk	44° 36' N	037° 58' E	518	300	A	0300, 0700, 1100, 1500, 1900, 2300
	Spain	Valencia	38° 43' N	000° 09' E	518	300	X	0350, 0750, 1150, 1550, 1950, 2350
					490		M	0200, 0600, 1000, 1400, 1800, 2200
	Turkey	Istanbul	41° 04' N	028° 57' E	518	300	D	0030, 0430, 0830, 1230, 1630, 2030
					490		B	0010, 0410, 0810, 1210, 1610, 2010
		Samsun	41° 17' N	036° 20' E	518	300	E	0040, 0440, 0840, 1240, 1640, 2040
					490		A	0000, 0400, 0800, 1200, 1600, 2000
		Antalya	36° 53' N	030° 42' E	518	300	F	0050, 0450, 0850, 1250, 1650, 2050
					490		D	0030, 0430, 0830, 1230, 1630, 2030
		Izmir	38° 21' N	026° 35' E	518	300	I	0120, 0520, 0920, 1320, 1720, 2120
					490		C	0020, 0420, 0820, 1220, 1620, 2020
	Ukraine	Kerch	45° 22' N	036° 29' E	518	120	G	0100, 0500, 0900, 1300, 1700, 2100
					490		U	0320, 0720, 1120, 1520, 1920, 2320
		Odessa	46° 29' N	030° 44' E	518	280	C	0230, 0630, 1030, 1430, 1830, 2230
					490		X	0350, 0750, 1150, 1550, 1950, 2350
IV	Bermuda (UK)	Bermuda	32° 23' N	064° 41' W	518	280	B	0010, 0410, 0810, 1210, 1610, 2010
	Canada	Riviere-au-Renard	50° 11' N	066° 07' W	518	300	C	0020, 0420, 0820, 1220, 1620, 2020
					490		D	0035, 0435, 0835, 1235, 1635, 2035
		Wiarton	44° 20' N	081° 10' W	518	300	H	0110, 0510, 0910, 1310, 1710, 2110
		St. Johns	47° 30' N	052° 40' W	518	300	O	0220, 0620, 1020, 1420, 1820, 2220
		Thunder Bay	48° 25' N	089° 20' W	518	300	P	0230, 0630, 1030, 1430, 1830, 2230
		Sydney, NS	46° 10' N	060° 00' W	518	300	Q	0240, 0640, 1040, 1440, 1840, 2240
					490		J	0255, 0655, 1055, 1455, 1855, 2255
		Yarmouth	43° 45' N	066° 10' W	518	300	U	0320, 0720, 1120, 1520, 1920, 2320
					490		V	0335, 0735, 1135, 1535, 1935, 2335
		Montreal	45° 41' N	073° 16' W	518	400	W	0340, 0740, 1140, 1540, 1940, 2340

(Continued on next page)

NAV area	Country	Station	Latitude	Longitude	Freq. (kHz)	Area (nm)	Station ID	Broadcast schedule (UTC)
IV	Canada	Labrador	53° 42' N	057° 01' W	518	300	X	0350, 0750, 1150, 1550, 1950, 2350
		Iqaluit, NU	63° 43' N	068° 33' W	518	300	T	0310, 0710, 1110, 1510, 1910, 2310
					490		S	0300, 0700, 1100, 1500, 1900, 2300
	Greenland	Kook Island (Nuuk)	64° 04' N	052° 01' W	518	400	W	0340, 0740, 1140, 1540, 1940, 2340
		Simiutaq	60° 37' N	046° 21' W	518	400	M	0200, 0600, 1000, 1400, 1800, 2200
	United States	Miami	25° 37' N	080° 23' W	518	240	A	0000, 0400, 0800, 1200, 1600, 2000
		Boston	41° 43' N	070° 30' W	518	200	F	0050, 0450, 0850, 1250, 1650, 2050
		New Orleans	29° 53' N	089° 57' W	518	200	G	0100, 0500, 0900, 1300, 1700, 2100
		Portsmouth	36° 43' N	076° 00' W	518	280	N	0210, 0610, 1010, 1410, 1810, 2210
		San Juan	18° 28' N	067° 04' W	518	200	R	0250, 0650, 1050, 1450, 1850, 2250
		Charleston	32° 08' N	081° 42' W	518	200	E	0040, 0440, 0840, 1240, 1640, 2040
	Netherlands Antilles	Curacao	12° 10' N	068° 52' W	518	400	H	0110, 0510, 0910, 1310, 1710, 2110
V	NIL							
VI	Argentina	Ushaia	54° 48' S	068° 18' W	518	280	M	0200, 0600, 1000, 1400, 1800, 2200
					490		A	0000, 0400, 0800, 1200, 1600, 2000
		Rio Gallegos	51° 37' S	069° 03' W	518	280	N	0210, 0610, 1010, 1410, 1810, 2210
					490		B	0010, 0410, 0810, 1210, 1610, 2010
		Rivadavia	45° 51' S	067° 25' W	518	280	O	0220, 0620, 1020, 1420, 1820, 2220
					490		C	0020, 0420, 0820, 1220, 1620, 2020
		Bahia Blanca	38° 43' S	062° 06' W	518	280	P	0230, 0630, 1030, 1430, 1830, 2230
					490		D	0230, 0630, 1030, 1430, 1830, 2230
		Mar del Plata	38° 03' S	057° 32' W	518	280	Q	0240, 0640, 1040, 1440, 1840, 2240
					490		E	0040, 0440, 0840, 1240, 1640, 2040
		Buenos Aires	34° 36' S	058° 22' W	518	560	R	0250, 0650, 1050, 1450, 1850, 2250
					490		F	0050, 0450, 0850, 1250, 1650, 2050
	Uruguay	La Paloma	34° 40' S	054° 09' W	518	280	F	0050, 0450, 0850, 1250, 1650, 2050
					490		A	0000, 0400, 0800, 1200, 1600, 2000
VII	Namibia	Walvis Bay	23° 03' S	014° 37' E	518	378	B	0010, 0410, 0810, 1210, 1610, 2010
	South Africa	Cape Town	33° 40' S	018° 43' E	518	300	C	0020, 0420, 0820, 1220, 1620, 2020
		Port Elizabeth	34° 02' S	025° 33' E	518	300	I	0120, 0520, 0920, 1320, 1720, 2120
		Durban	29° 48' S	030° 49' E	518	300	O	0220, 0620, 1020, 1420, 1820, 2220
VIII	India	Mumbai (Bombay)	19° 05' N	072° 50' E	518	250	G	0100, 0500, 0900, 1300, 1700, 2100
		Madras	13° 05' N	080° 17' E	518	400	P	0230, 0630, 1030, 1430, 1830, 2230
	Mauritius	Mauritius	20° 10' S	057° 28' E	518	400	C	0020, 0420, 0820, 1220, 1620, 2020

(Continued on next page)

NAV area	Country	Station	Latitude	Longitude	Freq. (kHz)	Area (nm)	Station ID	Broadcast schedule (UTC)
IX	Bahrain	Hamala	26° 09' N	050° 28' E	518	300	B	0010, 0410, 0810, 1210, 1610, 2010
	Egypt	Ismailia	30° 28' N	032° 22' E	518	200	X	0350, 0750, 1150, 1550, 1950, 2350
		Quseir (Kosseir)	26° 06' N	034° 17' E	518	400	V	0330, 0730, 1130, 1530, 1930, 2330
	Iran	Bandar Abbas	27° 07' N	056° 03' E	518	300	F	0050, 0450, 0850, 1250, 1650, 2050
					490		I	0120, 0520, 0920, 1320, 1720, 2120
		Bushehr	28° 59' N	050° 49' E	518	300	A	0000, 0400, 0800, 1200, 1600, 2000
					490		D	0030, 0430, 0830, 1230, 1630, 2030
	Oman	Muscat	23° 36' N	058° 30' E	518	270	M	0200, 0600, 1000, 1400, 1800, 2200
	Pakistan	Karachi	24° 51' N	067° 03' E	518	400	P	0230, 0630, 1030, 1430, 1830, 2230
	Saudi Arabia	Jeddah	21° 23' N	039° 10' E	518	390	H	0705, 1305, 1905
		Damman	26° 26' N	050° 06' E	518	390	G	0100, 0500, 0900, 1300, 1700, 2100
X	NIL							
XI	China	Sanya	18° 14' N	109° 30' E	518	250	M	0200, 0600, 1000, 1400, 1800, 2200
		Guangzhou	23° 09' N	113° 29' E	518	250	N	0210, 0610, 1010, 1410, 1810, 2210
		Fuzhou	26° 01' N	119° 18' E	518	250	O	0220, 0620, 1020, 1420, 1820, 2220
		Shanghai	31° 08' N	121° 33' E	518	250	Q	0240, 0640, 1040, 1440, 1840, 2240
		Dalian	38° 52' N	121° 31' E	518	250	R	0250, 0650, 1050, 1450, 1850, 2250
	Hong Kong	Hong Kong	22° 13' N	114° 15' E	518	400	L	0150, 0550, 0950, 1350, 1750, 2150
	Indonesia	Jayapura	02° 31' S	140° 43' E	518	300	A	0000, 0400, 0800, 1200, 1600, 2000
		Ambon	03° 42' S	128° 12' E	518	300	B	0010, 0410, 0810, 1210, 1610, 2010
		Makassar	05° 06' S	119° 26' E	518	300	D	0030, 0430, 0830, 1230, 1830, 2030
		Jakarta	06° 06' S	106° 54' E	518	300	E	0040, 0440, 0840, 1240, 1640, 2040
	Japan	Otaru	43° 19' N	140° 27' E	518	400	J	0130, 0530, 0930, 1330, 1730, 2130
		Kushiro	42° 57' N	144° 36' E	518	400	K	0140, 0540, 0940, 1340, 1740, 2140
		Yokohama	35° 14' N	139° 55' E	518	400	I	0120, 0520, 0920, 1320, 1720, 2120
		Moji	34° 01' N	130° 56' E	518	400	H	0110, 0510, 0910, 1310, 1710, 2110
		Naha	26° 05' N	127° 40' E	518	400	G	0100, 0500, 0900, 1300, 1700, 2100
	Korea, Republic of	Chukpyong	37° 03' N	129° 26' E	518	200	V	0330, 0730, 1130, 1530, 1930, 2330
					490		J	0130, 0530, 0930, 1330, 1730, 2130
		Pyongsan	35° 36' N	126° 29' E	518	200	W	0340, 0740, 1340, 1540, 1940, 2340
					490		K	0140, 0540, 0940, 1340, 1740, 2140
	Malaysia	Penang	05° 26' N	100° 24' E	518	350	U	0320, 0720, 1120, 1520, 1920, 2320
		Miri	04° 28' N	114° 01' E	518	350	T	0310, 0710, 1110, 1510, 1910, 2310
		Sandakan	05° 54' N	118° 00' E	518	350	S	0300, 0700, 1100, 1500, 1900, 2300

(Continued on next page)

NAV area	Country	Station	Latitude	Longitude	Freq. (kHz)	Area (nm)	Station ID	Broadcast schedule (UTC)
XI	North Korea	Hamhung	39° 50' N	127° 41' E	518	200	E	0040, 0440, 0840, 1240, 1840, 2240
					490		B	0010, 0410, 0810, 1210, 1610, 2210
		Pyongyang	38° 55' N	125° 43' E	518	200	D	0030, 0430, 0830, 1230, 1830, 2230
					490		A	0000, 0400, 0800, 1200, 1600, 2200
	Philippines	Davao	07° 04' N	125° 36' E	518	400	K	0140, 0540, 0940, 1340, 1740, 2140
		Manila	14° 35' N	121° 03' E	518	400	J	0130, 0530, 0930, 1330, 1730, 2130
		Puerto Princesa	09° 44' N	118° 43' E	518	400	I	0120, 0520, 0920, 1320, 1720, 2120
	Singapore	Singapore	01° 21' N	103° 59' E	518	400	C	0020, 0420, 0820, 1220, 1620, 2020
	Taiwan	Kaohsiung	22° 29' N	120° 25' E	518	216	P	0230, 0630, 1030, 1430, 1830, 2230
		Chilung	25° 09' N	121° 44' E	518	400	P	0230, 0630, 1030, 1430, 1830, 2230
	Thailand	Bangkok	13° 43' N	100° 34' E	518	200	F	0050, 0450, 0850, 1250
	United States	Guam	13° 29' N	144° 50' E	518	100	V	0330, 0730, 1130, 1530, 1930, 2330
	Vietnam	Ho Chi Minh City	10° 23' N	107° 08' E	518	400	X	0350, 0750, 1150, 1550, 1950, 2350
		Haiphong	20° 44' N	106° 44' E	490		W	0340, 0740, 1140, 1540, 1940, 2340
		Danang	16° 05' N	108° 13' E	518	400	K	0140, 0540, 0940, 1340, 1740, 2140
XII	Canada	Prince Rupert	54° 20' N	130° 20' W	518	300	D	0030, 0430, 0830, 1230, 1630, 2030
		Tofino	48° 55' N	125° 35' W	518	300	H	0110, 0510, 0910, 1310, 1710, 2110
	Ecuador	Ayora	00° 45' S	090° 19' W	518	400	L	0150, 0550, 0950, 1350, 1750, 2150
					490		A	0000, 0400, 0800, 1200, 1600, 2000
	United States	San Francisco	37° 55' N	122° 44' W	518	350	C	0020, 0420, 0820, 1220, 1620, 2020
		Kodiak (EAST)	57° 46' N	152° 34' W	518	200	J	0130, 0530, 0930, 1330, 1730, 2130
		Kodiak (WEST)					X	0350, 0750, 1150, 1550, 1950, 2250
		Honolulu	21° 22' N	158° 09' W	518	350	O	0220, 0620, 1020, 1420, 1820, 2220
		Cambria	35° 31' N	121° 03' W	518	350	Q	0240, 0640, 1040, 1440, 1840, 2240
		Astoria	46° 10' N	123° 49' W	518	216	W	0340, 0740, 1140, 1540, 1940, 2240
XIII	Russia	Beringovskiy	63° 03' N	179° 20' E	518	400	E	0040, 0440, 0840, 1240, 1640, 2040
		Kholmsk	47° 02' N	142° 03' E	518	300	B	0010, 0410, 0810, 1210, 1610, 2010
		Magadan	59° 41' N	150° 09' E	518	120	D	0030, 0430, 0830, 1230, 1630, 2030
		Okhotsk	59° 22' N	143° 12' E	518	300	G	0100, 0500, 0900, 1300, 1700, 2100
		Petropavlovsk	53° 00' N	158° 40' E	518	300	C	0020, 0420, 0820, 1220, 1620, 2020
		Provideniya	64° 40' N	173° 10' W	518	400	F	0050, 0450, 0850, 1250, 1650, 2050
		Vladivostok	43° 23' N	131° 54' E	518	230	A	0000, 0400, 0800, 1200, 1600, 2000
XIV	NIL							

(Continued on next page)

NAV area	Country	Station	Latitude	Longitude	Freq. (kHz)	Area (nm)	Station ID	Broadcast schedule (UTC)
XV	Chile	Antofagasta	23° 40' S	070° 25' W	518	300	A	0400, 1200, 2000
							H	0000, 0800, 1600
		Valparaiso	32° 48' S	071° 29' W	518	300	B	0410, 1210, 2010
							I	0010, 0810, 1610
		Talcahuano	36° 42' S	073° 06' W	518	300	C	0420, 1220, 2020
							J	0020, 0820, 1620
		Puerto Montt	41° 30' S	072° 58' W	518	300	D	0430, 1230, 2030
							K	0030, 0830, 1630
		Punta Arenas	53° 09' S	070° 58' W	518	300	E	0440, 1240, 2040
							L	0040, 0840, 1640
		Isla de Pascua	27° 09' S	109° 25' W	518	300	F	0450, 1250, 2050
							G	0050, 0850, 1650
XVI	Ecuador	Guayaquil	02° 17' S	079° 52' W	518	400	M	0200, 0600, 1000, 1400, 1800, 2200
	Peru	Paita	05° 05' S	081° 07' W	518	200	S	0300, 0700, 1100, 1500, 1900, 2300
		Callao	12° 03' S	077° 09' W	518	200	U	0320, 0720, 1120, 1520, 1920, 2320
		Mollendo	17° 01' S	072° 01' W	518	200	W	0340, 0740, 1140, 1540, 1940, 2340
XVII	NIL							
XVIII	Greenland	Uppernavik	72° 47' N	056° 07' W	518	400	I	0120, 0520, 0920, 1320, 1720, 2120
XIX	Norway	Bodo	67° 16' N	014° 23' E	518	450	B	0010, 0410, 0810, 1210, 1610, 2010
		Vardoe Radio	70° 22' N	031° 06' E	518	450	C	0020, 0420, 0820, 1220, 1620, 2020
		Svalbard	78° 04' N	013° 38' E	518	450	A	0000, 0400, 0800, 1200, 1600, 2000
XX	Russia	Arkhangelsk	64° 51' N	040° 17' E	518	300	L	0150, 0550, 0950, 1350, 1750, 2150
		Murmansk	68° 46' N	032° 58' E	518	300	K	0140, 0540, 0940, 1340, 1740, 2140
XXI	Russia	Tiksi	71° 38' N	128° 50' E	518	300	Q	0240, 0640, 1040, 1440, 1840, 2240

The page is intentionally left blank

2. OPERATION

2.1 Control Description

All operation of the NX-300 is carried out with the controls on the front panel of the display unit.

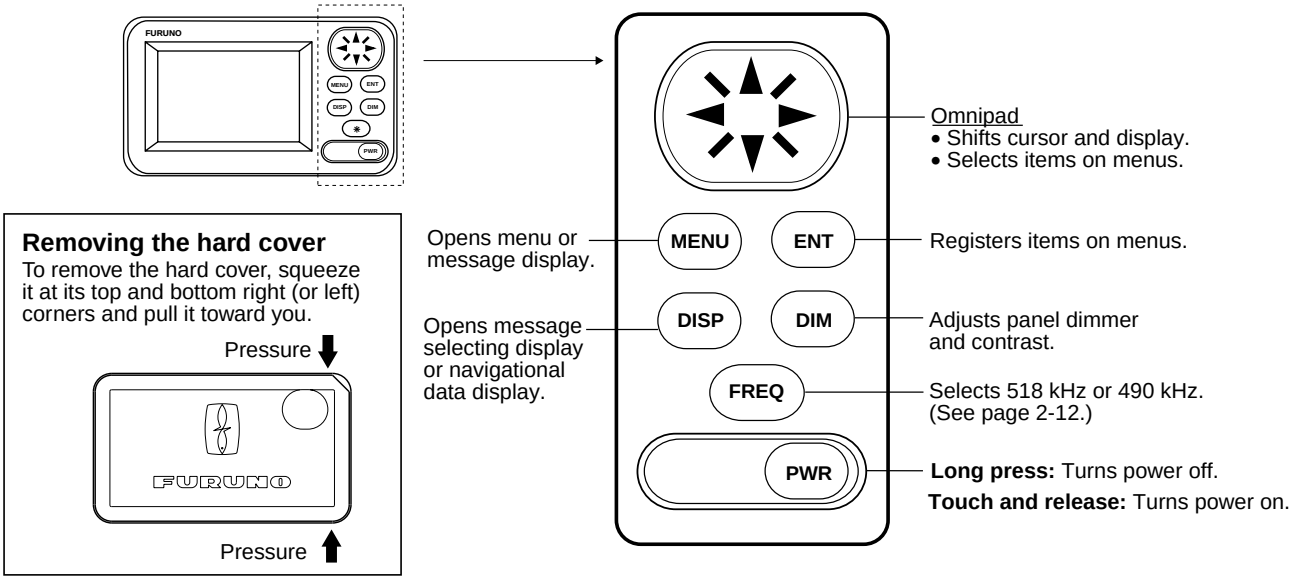

Figure 2-1 Control panel

2.2 Turning the Power On/Off

Turning on: Press the [PWR] key. “NO MESSAGE” (message waiting screen) appears. When a message is received, it appears on the screen and in case of a long message, it scrolls continuously.

To confirm version number of the equipment, press the [PWR] key a little longer. Release the key when the following window appears.

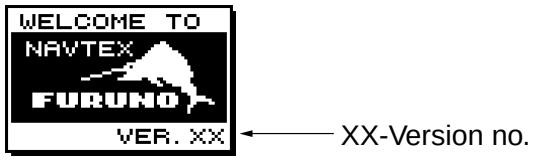

Figure 2-2 TURNING ON window

Turning off: Press the [PWR] key for 3 seconds.

Figure 2-3 TURNING OFF window

Note: The NX-300 should be turned on for the duration of a voyage so that important warning messages will not be missed.

2.3 Adjusting Dimmer and Contrast

1. Press the [DIM] key to show the dimmer and contrast setting window.

Figure 2-4 DIMMER and CONTRAST setting window

2. Press ▲ or ▼ for best illumination of the control panel and LCD.
3. Press ◀ or ▶ for best contrast of the LCD.
4. Press the [ENT] key to close the dimmer and contrast setting window.

Note: If you turn off the power with contrast less than 36, contrast is automatically set to 36 when you turn on the power again.

2.4 Menu Operation Overview

The menu allows you to custom tailor the NX-300 according to your needs. You can select which categories of message you wish to receive, specify which data to display, etc.

1. Press the [MENU] key to open the main menu.

Figure 2-5 Main menu

Note: If you press the [MENU] key again at the main menu, the message waiting screen appears.

2. Press ▲ or ▼ to select menu item. As you operate ▲ or ▼, the selected item appears in reverse video. For example, select FUNCTIONS.
3. Press the [ENT] key to open menu selected.

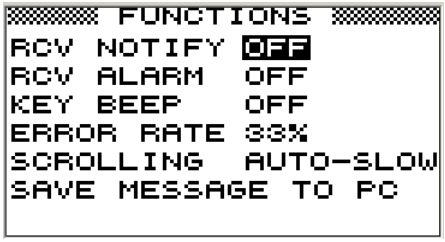

Figure 2-6 FUNCTIONS menu

4. Press ▲ or ▼ to select menu item and press the [ENT] key. For example, select RCV ALARM. Corresponding option menu appears.

Figure 2-7 ON/OFF window

5. Press ▲ or ▼ to select option desired.
6. Press the [ENT] key to resister your selection.
7 Press the [MENU] key once to return to the menu or twice to quit the menu.

2.5 Selecting Stations

The STATION SELECTION menu allows you to select what stations to receive, automatically or manually. In the AUTO mode stations are automatically selected according to the distance between own ship and NAVTEX stations. External navigational data is required to use the AUTO mode. If it is not input, all stations are selected. In the MANUAL mode you can select what stations you wish to receive. Default setting is the AUTO mode.

1. Press the [MENU] key to open the main menu.
2. Press ▲ or ▼ to select STATION SELECTION.
3. Press the [ENT] key. The MODE window appears.

Figure 2-8 MODE window

4. Press ▲ or ▼ to select AUTO or MANUAL as desired.
5. For the AUTO mode, press the [ENT] key to close the menu.
   For the MANUAL mode, do the following:
   a) Press the [ENT] key. The STATION SELECTION menu appears.

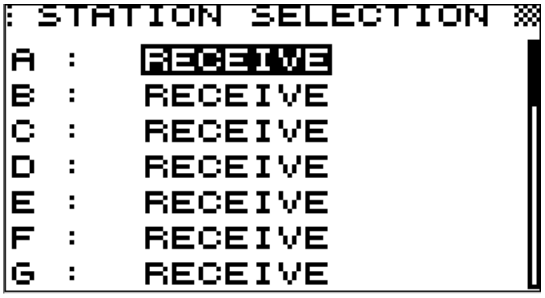

Figure 2-9 STATION SELECTION menu

   b) Press ▲ or ▼ to select a station you want to change the current setting.
   c) Press the [ENT] key to show the following window.

Figure 2-10 RECEIVE/IGNORE window

d) Press ▲ or ▼ to select RECEIVE or IGNORE depending on whether you want to select or deselect the station.
e) Press the [ENT] key.
f) Repeat steps b) to e) to select or deselect other stations.
g) Press the [MENU] key or [DISP] key to close the STATION SELECTION menu.

2.6 Selecting Messages

1. Press the [MENU] key to open the main menu.
2. Press ▲ or ▼ to select MESSAGE SELECTION.
3. Press the [ENT] key to show the MESSAGE SELECTION menu.

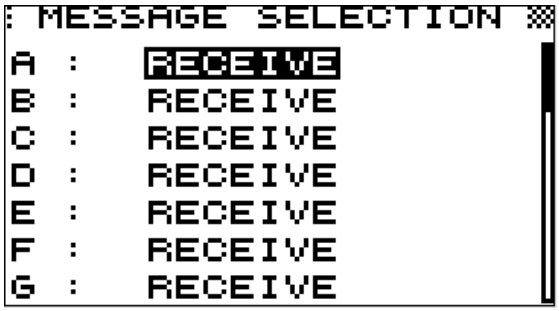

Figure 2-11 MESSAGE SELECTION menu

4. Press ▲ or ▼ to select a message you want to change the current setting.
5. Press the [ENT] key to show the following window.

Figure 2-12 RECEIVE/IGNORE window

6. When you change RECEIVE into IGNORE for message type A, B, D or L, the following window appears to confirm. For all other message types proceed to step 8.

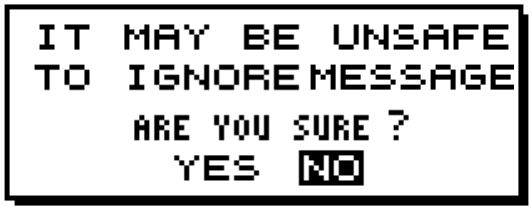

Figure 2-13 Ignore message window

7. Press ◀ or ▶ to select YES or NO. Select YES to change the current setting, or NO not to change.
8. Press the [ENT] key.
9. Repeat steps 4 to 8 to select or deselect other message types.
10. Press the [MENU] key or [DISP] key to close the MESSAGE SELECTION menu.

2.7 Setting Functions (FUNCTIONS menu)

See menu description below for detailed information.

1. Press the [MENU] key to open the main menu.
2. Press ▲ or ▼ to select FUNCTIONS.
3. Press the [ENT] key to display the FUNCTIONS menu.

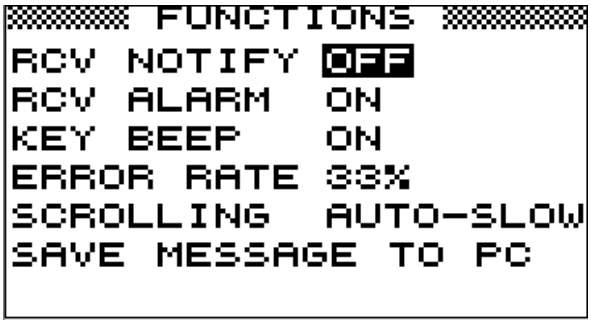

Figure 2-14 FUNCTIONS menu

4. Press ▲ or ▼ to select menu item and press the [ENT] key.
5. Press ▲ or ▼ to select option desired.
6. Press the [ENT] key to register your selection.
7. Press the [MENU] key twice to close the menu.

2.7.1 FUNCTIONS menu description

RCV NOTIFY: The raw NAVTEX signal can be monitored through the monitor speaker by turning RCV NOTIFY on. The default setting is OFF.

RCV ALARM: The audible alarm may be generated when message type A, B, D or L is received. The default setting is ON.

KEY BEEP: The equipment can emit a beep tone when a control is operated. The default setting is ON.

ERROR RATE: When character error occurs due to noise interference during signal propagation, erroneous character is displayed as "∗".

Error Rate means character error rate and is calculated as followed:
Error Rate = number of erroneous characters ÷ total number of characters received × 100 (%)
(Total number of characters includes space, line feed, carriage returns, etc.)

When the character error rate is within the percentage you set (0-39%), the NX-300 displays the message and stores it. When it exceeds the percentage you set, the NX-300 neither displays nor stores the message. You may set the threshold level of character error rate as desired and the default setting is 33%.

SCROLLING: This menu item lets you select how to scroll the message display. The default setting is AUTO-SLOW.

AUTO-SLOW: Long press of ▲ or ▼ scrolls line-by-line slowly automatically. Touch and release ▼ to scroll manually.

AUTO-FAST: Long press of ▲ or ▼ scrolls line-by-line automatically, faster than AUTO-SLOW. Touch and release ▼ to scroll manually.

SKIP-$$: The U.S. National Weather Service broadcasts weather information via the U.S. Coast Guard NAVTEX stations. Their messages contain $$, the continue indicator. You can quickly jump to the next continue indicator. Long press of ▲ or ▼ skips to $$.

SAVE MESSAGE TO PC: Select to download message to a PC. See the next paragraph.

2.7.2 Downloading Messages to a PC

Wiring

Your equipment provides a wiring diagram that shows how to connect to a PC using a DSUB 9-pin connector. Refer to the interconnection diagram for details.

1. Press the [MENU] key to open the main menu.
2. Press ▲ or ▼ to select SYSTEM MENU.
3. Press the [ENT] key to show the SYSTEM MENU.
4. Press ▼ to select WIRING INFO?.
5. Press the [ENT] key to show the wiring info display.

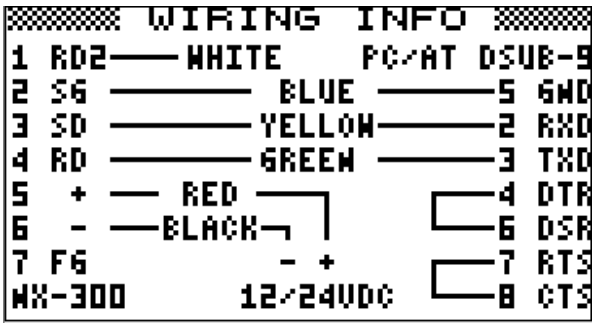

Figure 2-15 Connection to PC using a DSUB 9-pin connector

A DSUB 25-pin (EIA-232) may also be used to make the connection. In this case the wiring diagram is as follows.

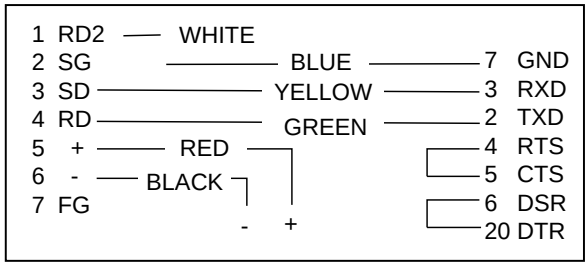

Figure 2-16 Connection to PC using a DSUB 25-pin connector

Setting for communication software on PC

Baud Rate:	4800 bps
Character Length:	8 bit
Stop Bit:	1 bit
Parity:	None
X Control:	XON/XOFF

Downloading messages to a PC

Set up the computer to receive data. Messages are downloaded to a PC character by character during reception.

To download all messages saved in NX-300, do the following;

1. Press the [MENU] key to open the main menu.
2. Press ▲ or ▼ to select FUNCTIONS.
3. Press the [ENT] key to show the FUNCTIONS menu.
4. Press ▼ to select SAVE MESSAGE TO PC.
5. Press the [ENT] key. The following display appears.

Figure 2-17 SAVE MESSAGE TO PC display

6. Press the [ENT] key.

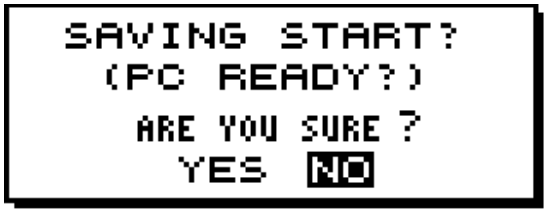

Figure 2-18 SAVING START window

7. Set up the computer to receive data.
8. Press ◀ to select YES and press the [ENT] key.

9. Press the [ENT] key to save. The following messages appear in order.

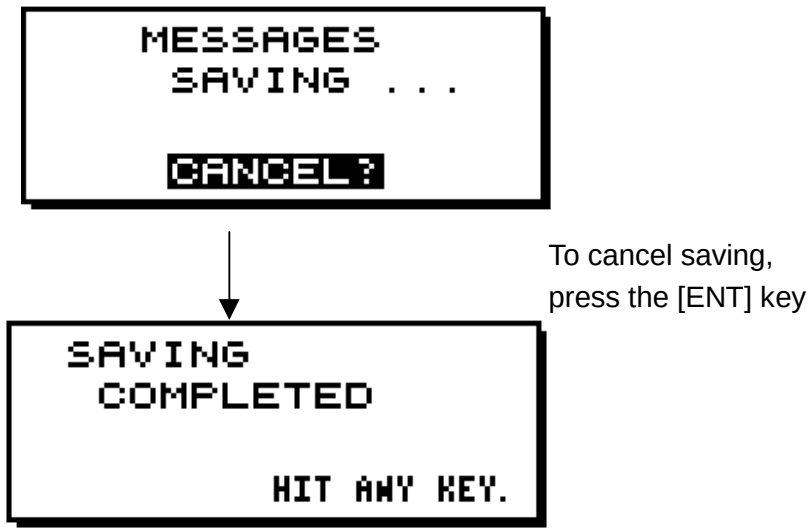

Figure 2-19 SAVING MESSAGES window

10. Press any key to escape.

Note1: No message is received during downloading.

Note2: When a PC or a serial printer is connected to the NX-300, received messages are displayed on a PC or printed on a serial printer but not displayed or saved to the NX-300 in the following cases;

- The NX-300 receives a message it has already saved.
- A message is interrupted to receive.

2.8 Selecting Language

You can select language displayed on the NX-300. Languages are English, French, German, Italian, Spanish, Dutch, Danish, and Portuguese.

1. Press the [MENU] key to open the main menu.
2. Press ▼ to select LANGUGE.
3. Press the [ENT] key. The following menu appears. (ENG: English, FRA: French, GER: German, ITA: Italian, SPA: Spanish, DUT: Dutch, DEN: Danish, POR: Portuguese)

Figure 2-20 LANGUAGE menu

4. Use the Omnipad to select language desired.
5. Press the [ENT] key to register your selection and press the [MENU] key to close the menu.

2.9 Displaying Messages

The NX-300 automatically saves and stores up to 132 received messages (However, the memory capacity is limited to 28,000 characters). If memory of the NX-300 is full, messages are deleted on order of time.

1. Press the [DISP] key to show the received messages log. Messages (numbers) are arranged in the order received from latest to earliest, Left to right.

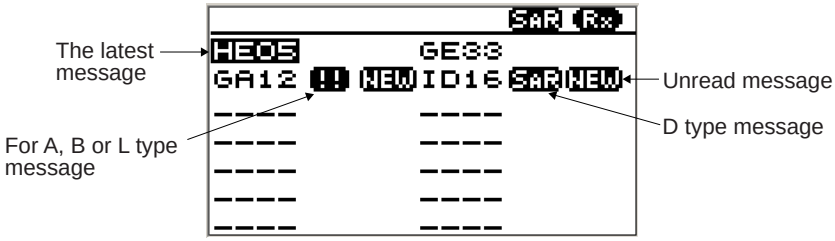

Figure 2-21 Received messages log

2. Operate the Omnipad to select the message to display. If more than 15 messages are saved, the scroll bar appears at the rigth side of the display. Press ▲ or ▼ to scroll the display.
3. Press the [ENT] key to display the message selected.

Note: If you want to see the received frequency (518 kHz or 490 kHz) also, change the window mode as shown on page 4-2.

2.10 Sample Messages

When message is displayed, press ▲ or ▼ to scroll message and press ◀ or ▶ to display the other message. When the oldest or newest message is displayed, the beep sounds.

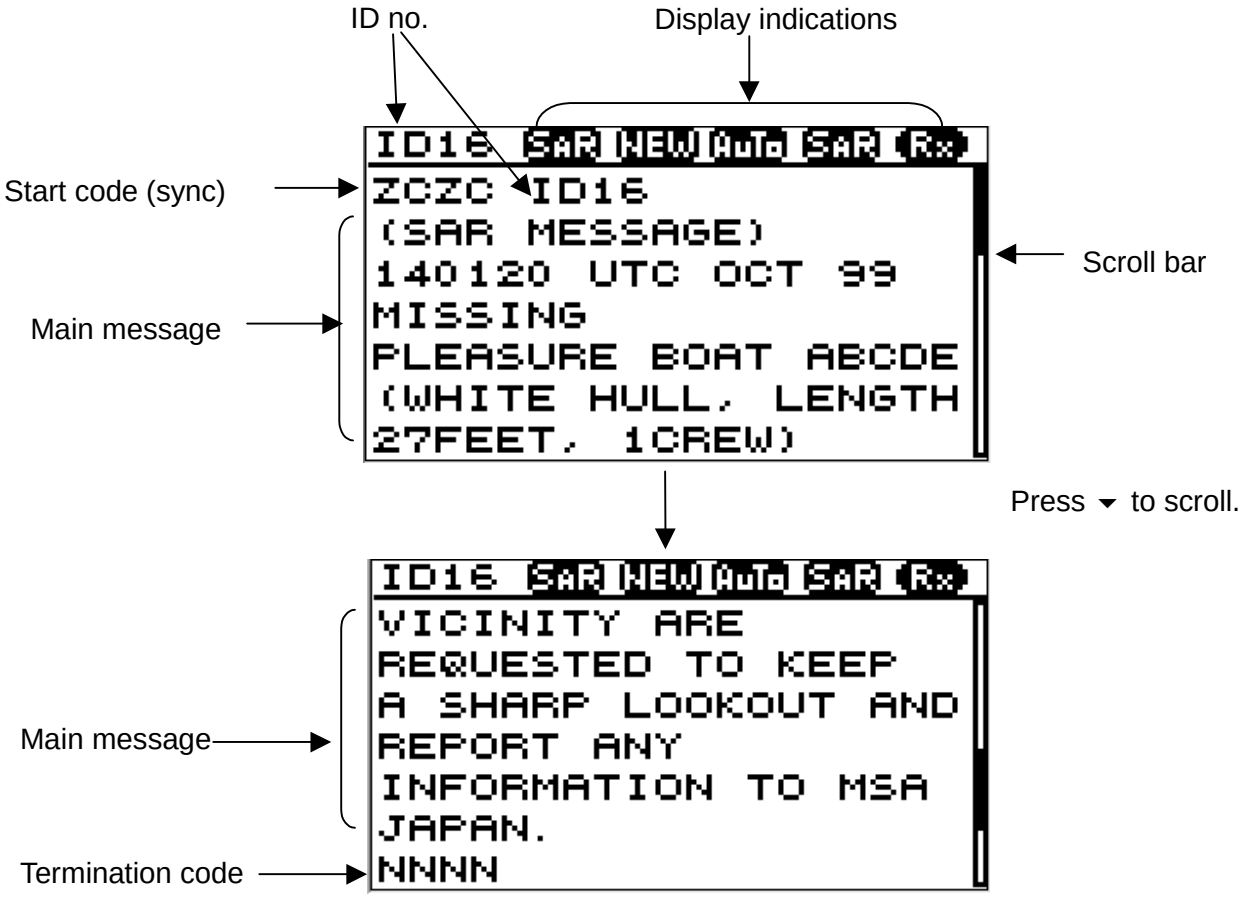

Figure 2-22 Sample messages

2.11 Displaying Navigation Data

With navigation data input the NX-300 can display navigation data, in addition to its primary function.

1. Press the [DISP] key to display the receiving messages log.
2. Press the [DISP] key again to display navigation data.

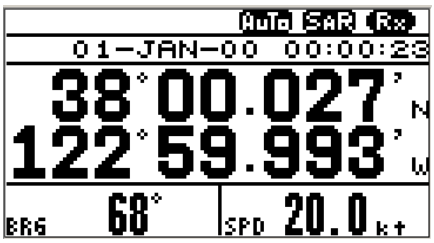

Figure 2-23 Nav data display

3. To return to the receiving message log, press the [DISP] key again.

2.12 Selecting Receive Frequency

1. Press the [FREQ] key to show the frequency window.

(Default setting is 518 kHz)

Figure 2-24 Frequency window

2. Press ▲ or ▼ to select receive frequency as appropriate.
3. Press the [ENT] key to close the frequency window.

3. SYSTEM MENU

3.1 Units of Measurement

When navigational data is fed to the NX-300, you can select units of distance and speed to use. Distance/speed can be displayed in nautical miles/knots, kilometers/kilometers per hour, or miles/ miles per hour. The default setting is nautical miles/knots.

1. Press the [MENU] key to open the main menu.
2. Press ▲ or ▼ to select SYSTEM MENU.
3. Press the [ENT] key. The SYSTEM MENU appears.

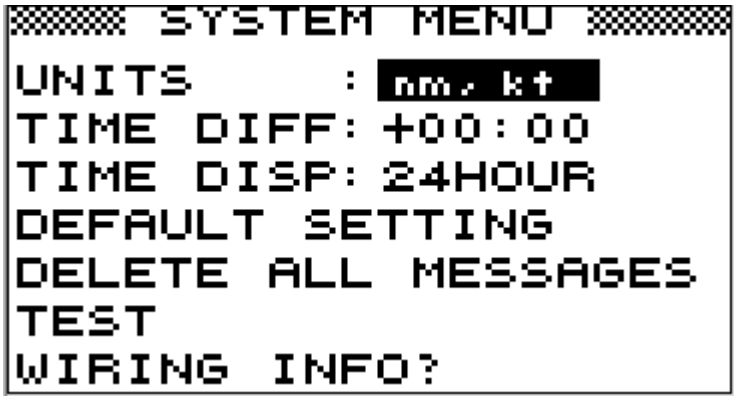

Figure 3-1 SYSTEM MENU

4. Press the [ENT] key. The following window appears.

Figure 3-2 UNITS window

5. Press ▲ or ▼ to select combination desired; nm, kt; km, km/h; mi, mi/h.
6. Press the [ENT] key.
7. Press the [MENU] key or [DISP] key to close the SYSTEM MENU.

3.2 Time Difference (using local time)

GPS uses UTC time. If a GPS receiver feeds nav data to the NX-300 and you would rather use local time, enter the time difference (range: -13:30 to +13:30) between local time and UTC time.

1. Press the [MENU] key to open the main menu.
2. Press ▲ or ▼ to select SYSTEM MENU.
3. Press the [ENT] key to open the SYSTEM MENU.

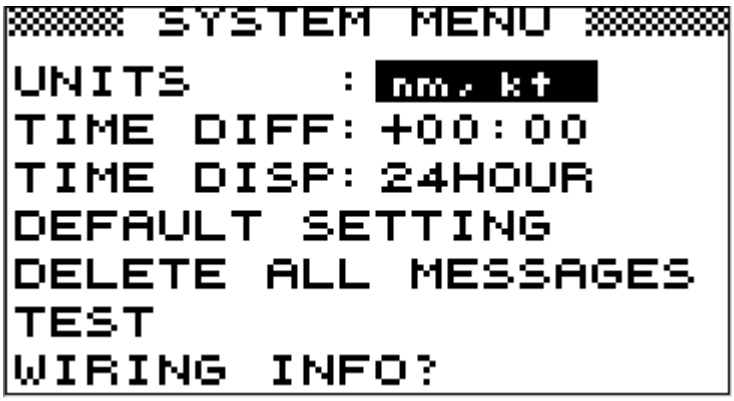

Figure 3-3 SYSTEM MENU

4. Press ▼ to select TIME DIFF.
5. Press the [ENT] key. A cursor circumscribes + or -. This cursor appears whenever selected data can be changed with Omnipad.

6 Press ▲ or ▼ to display + or -.

7. Press ▶ to move the cursor to the next column.
8. Press ▲ or ▼ to select number desired.
9. Repeat steps 7 and 8 to complete.
10. Press the [ENT] key.
11. Press the [MENU] key or [DISP] key to close the SYSTEM MENU.

3.3 Time Display

When navigational data is fed to the NX-300, you may display the time in 12-hour or 24-hour notation. The default setting is 24-hour notation. AM or PM is shown when 12-hour notation is selected.

1. Press the [MENU] key to open the main menu.
2. Press ▲ or ▼ to select SYSTEM MENU.
3. Press the [ENT] key. The SYSTEM MENU appears.
4. Press ▼ to select TIME DISP.
5. Press the [ENT] key. The following window appears.

Figure 3-4 TIME DISP window

6. Press ▲ or ▼ to select 12HOUR or 24HOUR as appropriate.
7. Press the [ENT] key.
8. Press the [MENU] key or [DISP] key to close the SYSTEM MENU.

3.4 Default Setting

This function restores all default settings.

1. Press the [MENU] key to open the main menu.
2. Press ▲ or ▼ to select SYSTEM MENU.
3. Press the [ENT] key to show the SYSTEM MENU.
4. Press ▼ to select DEFAULT SETTING.
5. Press the [ENT] key. The following window appears.

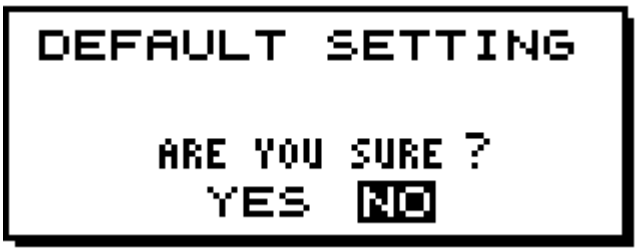

Figure 3-5 DEFAULT SETTING window

6. Press ◀ to select YES. If you want to cancel, press the [ENT] key to select NO before pressing ◀.
7. Press the [ENT] key.
8. Press the [MENU] key or [DISP] key to close the SYSTEM MENU.

3.5 Delete All Messages

This function deletes all messages NX-300 saves.

1. Press the [MENU] key to open the main menu.
2. Press ▲ or ▼ to select SYSTEM MENU.
3. Press the [ENT] key to show the SYSTEM MENU.
4. Press ▼ to select DELETE ALL MESSAGES.
5. Press the [ENT] key. The following window appears.

Figure 3-6 DELETE ALL MESSAGES window

6. Press ◀ to select YES.
7. Press the [ENT] key.
8. Press the [MENU] key or [DISP] key to close the SYSTEM MENU.

3.6 User Display of Navigation Data

The NX-300 can function as nav data display when connected to navigation equipment.

You may choose what data to display in the three cells below the date and time indications on the nav data display. The choices of data are speed, course, range, bearing, power source voltage and position in latitude and longitude (not available for “LEFT” or “RIGHT”).

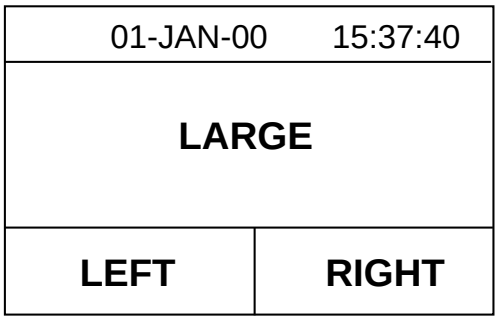

Figure 3-7 Location of nav data indications

1. Press the [MENU] key to open the main menu.
2. Press ▼ to select USER DISPLAY.

3. Press the [ENT] key to show the USER DISPLAY menu. The cursor is now on the LARGE field. LARGE means the center indication on the nav data display.

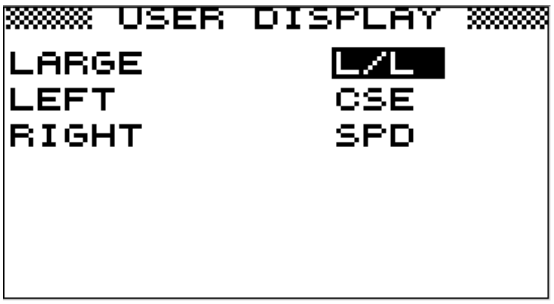

Figure 3-8 USER DISPLAY

4. Press the [ENT] key. The following window appears.

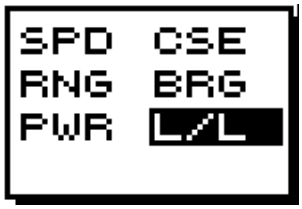

Figure 3-9 Options for LARGE window

5. Operate the Omnipad to select item desired. (SPD: Speed, CSE: Course, RNG: Range to destination, BRG: Bearing to destination, PWR: Power source voltage, L/L: position in latitude and longitude)
6. Press the [ENT] key.
7. Select the items LEFT and RIGHT and set their options like you did for LARGE, referring to Figure 3-7 for location of indications.

Figure 3-10 Options for LEFT, RIGHT

8. Press [DISP] key twice to display the navigation data.

The figure below shows display appearance for the setting shown in Figure 3-8.

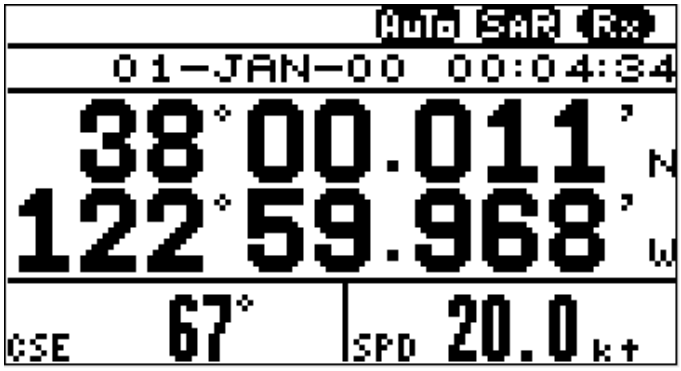

Figure 3-11 Nav data display

This page is intentionally left blank.

4. OTHER FUNCTIONS

4.1 DEMO Mode

The DEMO mode provides simulated operation of this unit. Connection of antenna is not necessary. You may select stations and messages manually or automatically and demo messages are received. All controls are operative.

Note: Turning on the DEMO mode erases all messages.

Press the [PWR] key while pressing ▸ to turn the power on. “SET DEMO MODE!” appears momentarily. “DEMO” appears at the top of the screen when the DEMO mode is active.

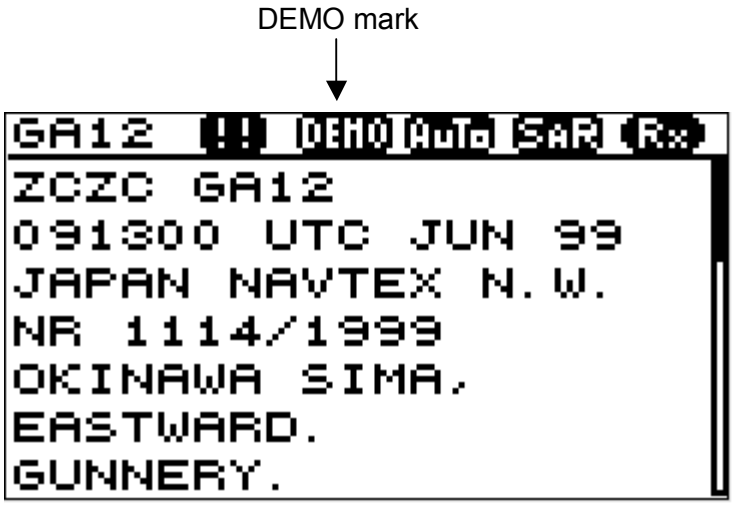

Figure 4-1 Message display

To escape the DEMO mode, press the [PWR] key while pressing ▸. “RESET DEMO MODE!” appears momentarily.

4.2 VIEW Mode

The NX-300 ordinarily displays messages in their entirety. The VIEW mode, however displays messages character by character.

Press the [PWR] key while pressing ▾ to turn the power on. “SET VIEW MODE!” appears momentarily. “VIEW” is displayed at the upper left corner of the display.

To quit the VIEW mode,: repeat above procedure. “RESET VIEW MODE!” appears.

4.3 All Clear

This function deletes all messages and restores default settings. When the NX-300 is first installed, you should clear all data.

Press the [PWR] key while pressing ▴ to turn the power on. “RESET BACKUP DATA!” appears momentarily while data is being cleared. Then, all default settings are restored.

4.4 Changing Received Message Log Window

You can show received frequency on the received message log as shown below.

1. Press the [PWR] key while pressing ◂ to turn the power on and release the keys after display appears.
2. Press the [DISP] key to show the received message log. The received frequencies (518 kHz and 490 kHz) are displayed on the window.

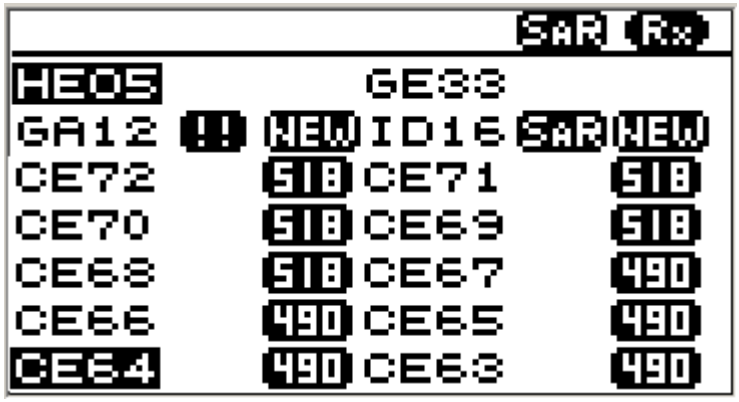

Figure 4-2 Received message log

3. To restore it, do step 1.

5. MAINTENANCE & TROUBLESHOOTING

⚠ WARNING

Do not open the equipment.

Only qualified personnel should work inside the equipment. Further, watertightness may be reduced.

5.1 Maintenance

Check the following points regularly to maintain performance:

- Check that connectors on the rear panel are firmly tightened and free of rust.
- Check that the ground system is free of rust and the ground wire is tightly fastened.
- Check that battery terminals are clean and free of rust.
- Check the antenna for damage. Replace if damaged.
- Dust and dirt on the keyboard and display screen may be removed with a soft cloth. Do not use chemical cleaners to clean the equipment; they may remove paint and markings.

5.2 Diagnostic Test

The diagnostic test checks ROM, RAM, data port, battery, keyboard and LCD for proper operation and displays program numbers.

1. Press the [MENU] key to open the main menu.
2. Press the ▲ or ▼ to select SYSTEM MENU.
3. Press the [ENT] key to show the SYSTEM MENU.
4. Press ▲ or ▼ to select TEST.
5. Press the [ENT] key. You are asked if you are ready to start the test.

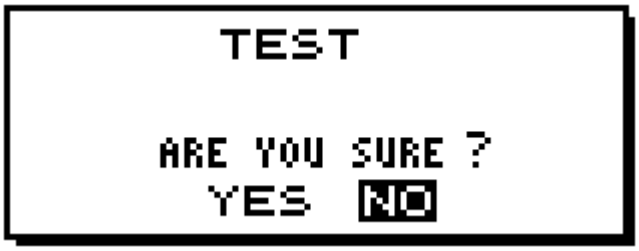

Figure 5-1 TEST window

6. Press the ◀ to select YES.

7. Press the [ENT] key to start the test. The equipment checks ROM, RAM, SIO and internal battery, and the results are individually displayed as OK or NG (No Good). Program numbers appear at the bottom of the display. If any NG is displayed, contact your dealer.

   Note 1: SIO requires a special connector to check. “03” appears as the result when no connector is connected.

   Note 2: CNT is the number of times test has been consecutively executed.

XX: Program version no.

Figure 5-2 TEST display

   After the equipment has checked the items shown in Figure 5-2, a beep sounds and the message PUSH KEY appears at the top right-hand corner.

8. Press each key one by one. The name of the key pressed momentarily appears at the top of right-hand corner if the key is functioning properly.

   Note: If no key is pressed within approx. five seconds, the equipment automatically displays the following message to inform you that it is now going to check the LCD.

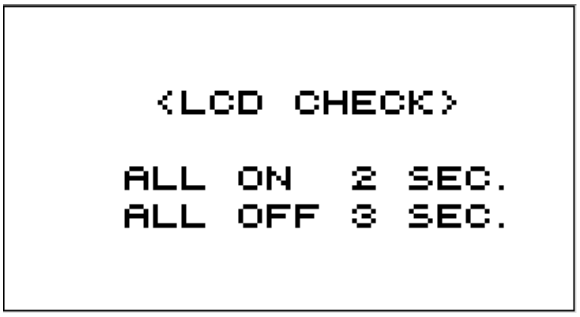

Figure 5-3 LCD CHECK display

9. The test repeats. Turn off the power to stop the test.

5.3 When the Battery Icon Appears

A lithium battery (type: CR2354-1F2, code no.: 000-142-305) is installed on the circuit board inside the display unit, and it preserves data when the power is turned off. The life of the battery is about 5-10 years. Its voltage is checked when the power is turned on. When its voltage is low the battery icon appears on the display to alert you. When this happens, contact your dealer to request replacement of the battery.

Note: When the battery is dead, all default settings are restored.

5.4 Replacement of Fuse

The 1 A fuse in the snap-in fuse holder on the power cable protects the equipment from equipment fault and reverse polarity of the ship's mains. If the fuse blows find out the cause before replacing it. If the fuse blows again after replacement, contact a FURUNO agent or dealer for advice. Use only a 1 A fuse – use of a different fuse will damage the equipment and void the warranty.

⚠ CAUTION

Use the proper fuse.

Use of a wrong fuse can cause fire or equipment damage.

This page is intentionally left blank.

6. INSTALLATION

6.1 Installation of Display Unit

Mounting considerations

The display unit can be installed on a tabletop, on the overhead, or in a panel (optional flush mounting kit required). Refer to the outline drawings at the end of this manual for installation instructions. When selecting a mounting location, keep in mind the following points:

- Locate the unit away from exhaust pipes and vents.
- The unit is waterproof thus it can be installed outdoors. However, locate it of direct sunlight, (or in a suitable, ventilated enclosure) to prevent heat which can build up inside the cabinet.
- The mounting location should be well ventilated.
- Mount the unit where shock and vibration are minimal.
- Allow sufficient maintenance space at the sides and rear of the unit and leave sufficient slack in cables, to facilitate maintenance and servicing.
- Observe the following compass safe distances to prevent deviation of a magnetic compass; Standard compass, 0.5 m, Steering compass, 0.3 m.
- After you install this equipment, perform All Clear as in paragraph 4.3 on page 4-1.

Tabletop overhead mounting

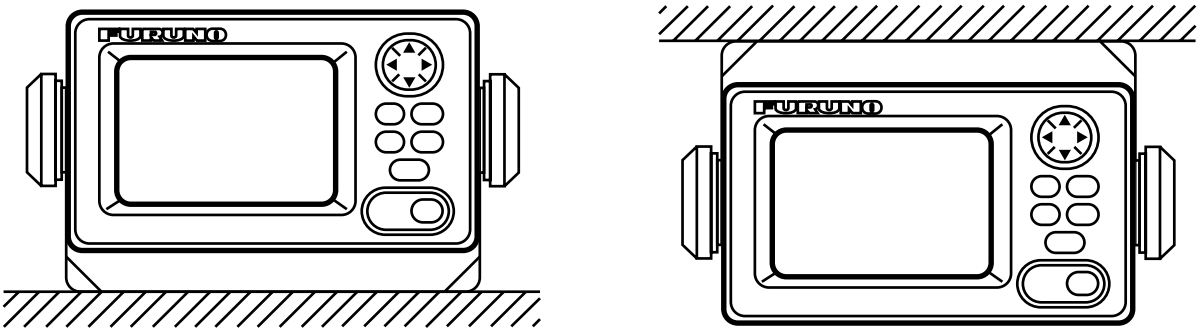

Tabletop Overhead

Figure 6-1 Tabletop and overhead mounting methods

Flush mounting

There are two types of flush mounting kits. For details, see the outline drawings at the end of this manual.

6.2 Installation of Antenna Unit

Mounting considerations

Install the antenna unit referring to the antenna installation diagram at the end of this manual. When selecting a mounting location for the antenna unit, keep in mind the following points:

- Do not shorten the antenna cable (10 m cable fitted to the antenna).
- Do not install the antenna unit within beamwidth of the radar.
- If the antenna cable is to be passed through a hole which is not large enough to pass the connector, you may unfasten the connector with a needle nose pliers and 3/8-inch open-end wrench. Refasten it as shown in Figure 6-2, after running the cable through the hole.
- To install an antenna unit other than the NX-3H-D, contact your dealer.

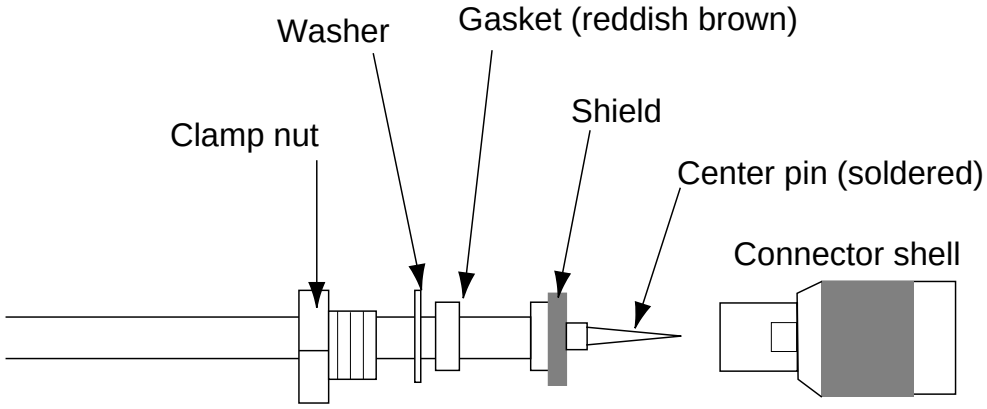

Figure 6-2 How to assemble the connector

6.3 Wiring

The figure below shows where to connect cables on the rear of the display unit.

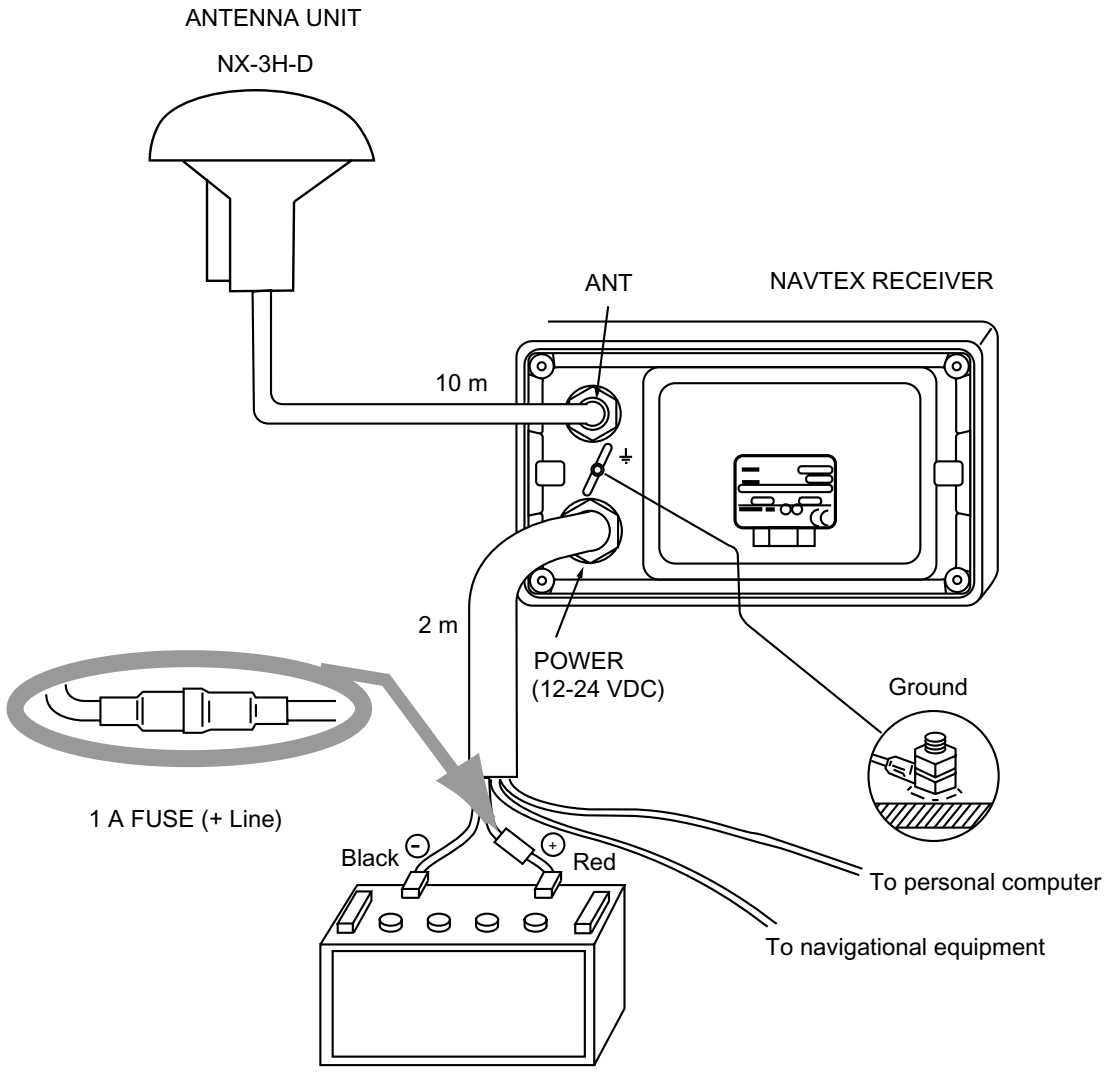

Figure 6-3 Wiring

Note: The fuse holder contains a spring that fixes the fuse. To prevent detachment of the spring, which would cause loss of power, tie the line as shown in Figure 6-4.

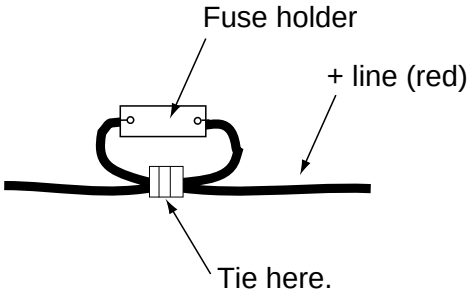

Figure 6-4 How to fix spring in fuse holder

Grounding

- The ground wire (local supply) should be 1.25 sq or larger for Navtex Receiver. The ground wire should be as short as possible.
- The signal ground and frame ground are separated, however the power line is not isolated. Therefore, if connecting other equipment which has signal ground connected to frame ground, the earth lamp will light. Especially, for positive ground battery separate the frame ground of the external equipment from the earth. If not, the equipment may be damaged.

External equipment

The power supply port is commonly used for connection of external equipment such as navigation equipment or a PC. Refer to the interconnection diagram on page S-1 for connection.

6.4 Interfacing

This equipment can receive navigation data in RS-232C format. For example, it can receive position data from GPS navigator GP-31/GP-36 for display on its screen. If you want to connect equipment which outputs data in a format other than RS-232C, a level converter is required for interface. Consult FURUNO dealer for details.

Input data sentence description

GGA: GPS position fixing condition (time of fix, latitude, longitude, receiving condition, number of satellites used, DOP)

GLL: Latitude and longitude

RMB: Generic navigational information (cross track error, steering direction, starting waypoint no., destination waypoint no., latitude and longitude of starting waypoint, latitude and longitude of destination waypoint, range and bearing to waypoint, range and bearing from present position to destination waypoint, velocity to destination, arrival alarm)

ZDA: Time and date

MENU TREE

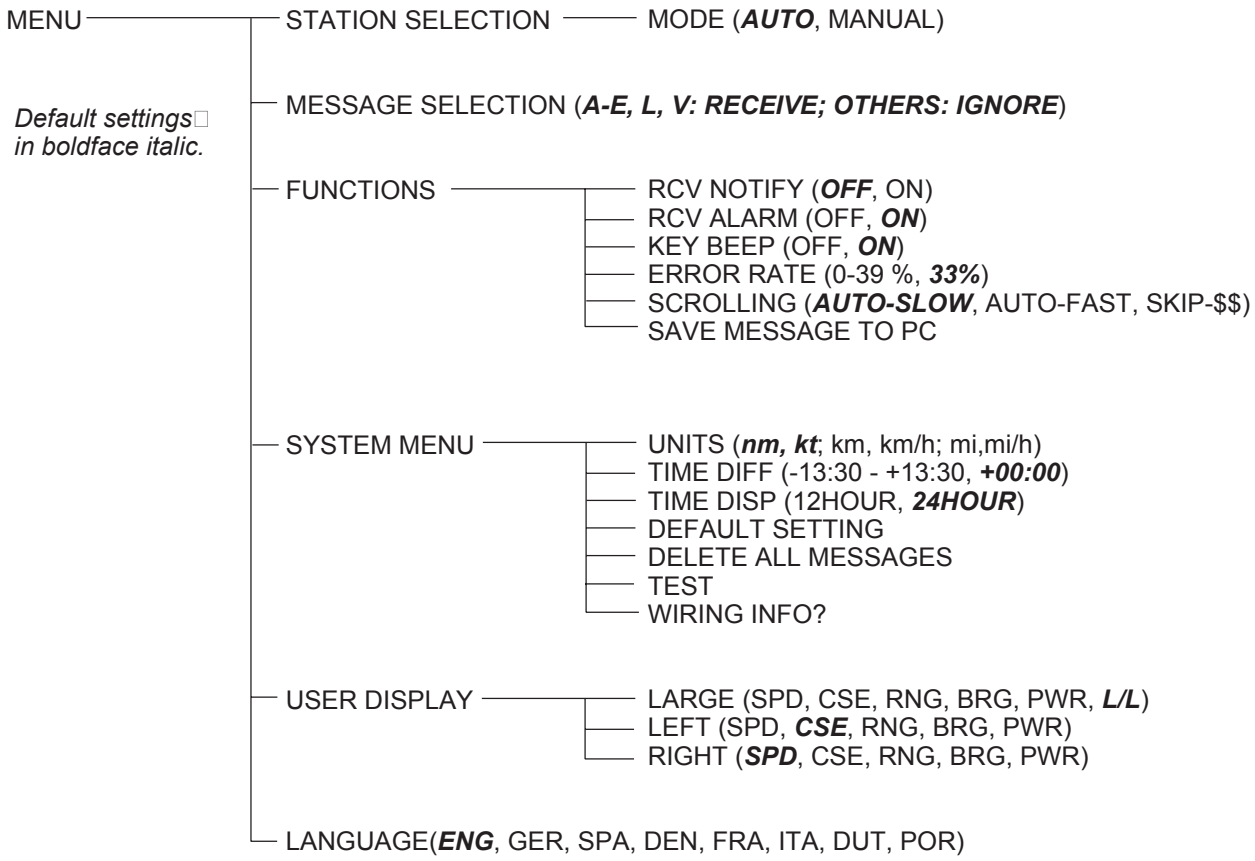

Default settings in boldface italic.

This page is intentionally left blank.

SPECIFICATIONS OF NAVTEX RECEIVER
NX-300

1 RECEIVER UNIT

1.1	Receiving frequency	518 kHz or 490 kHz
1.2	Mode of reception	F1B
1.3	Sensitivity	2 μV e.m.f. (50 ohms), 4% error rate
1.4	Message category	A: Navigation warning B: Meteorological warning C: Ice report D: Search and rescue information/ piracy and armed robbery E: Meteorological forecast F: Pilot message G: AIS service message (non navigational aid) H: Loran-C message I: Reserve – presently not used J: Differential omega message K: Other electronic navigational aid and system message L: Navigational warning (additional) M to U: Reserve – presently not used V: Notice to Fishermen (US only) W to Y: Reserve – presently not used Z: QRU (no message on hand)

2 DISPLAY SECTION

2.1	Display system	4.5-inch (95 x 60 mm) Monochrome LCD, 120 x 64 pixels
2.2	Display modes	Message Selection Mode, NAV Data Mode, Message Display Mode
2.3	Message storage	28,000 Characters

3 ANTENNA UNIT

3.1	Selectable Antenna	NX-3H-D: H-field antenna for NX-300-H-D Others: Local supply antenna for NX-300-N-D
3.2	Input Impedance	50 ohms
3.3	Power supply	+5.0 VDC

4 INTERFACE

4.1	Input data	NMEA0183 Ver.1.5/2.0, RS-232C, 4800 bps GGA, GLL, RMB, ZDA
4.2	Output data	Message data for personal computer, RS-232C, 4800 bps Data length: 8, Stop bit: 1, Parity: None T/R Code: CR+LF, XON/XOFF Control, Local echo: ON

5 POWER SUPPLY

12-24 VDC: 180-90 mA

6 ENVIRONMENTAL CONDITION

6.1	Ambient temperature	
	Antenna unit	-25°C to +70°C
	Receiver unit	-15°C to +55°C
6.2	Relative humidity	95% or less at +40°C
6.3	Degree of protection	
	Antenna unit	IPX6
	Receiver unit	IPX5
6.4	Vibration	IEC 60945 Ed.4

7 COATING COLOR

7.1	Antenna unit	N9.5
7.2	Receiver unit	Panel: N3.0, Chassis: 2.5GY5/1.5

PACKING LIST

NX-300-H-D

A-1

NAME	OUTLINE	DESCRIPTION/CODE No.	Q'TY
ユニット UNIT			
ﾅﾌﾞﾃｯｸｽ受信機 NAVTEX RECEIVER	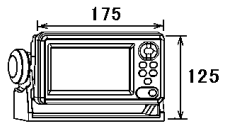	NX-300-D 000-015-918-00	1
空中線部 ANTENNA UNIT	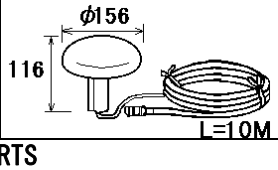	NX-3H-D 000-059-204-00	1
予備品 SPARE PARTS			
予備品 SPARE PARTS		SP08-02401 001-072-500-00	1
付属品 ACCESSORIES			
付属品 ACCESSORIES		FP14-02801 001-057-060-00	1
工事材料 INSTALLATION MATERIALS		**CP08-02200**	
ｹｰﾌﾞﾙ組品MJ CABLE ASSY.	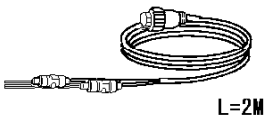	MJ-A7SPF0009-020C 000-159-686-10	1
工事材料 INSTALLATION MATERIALS		CP08-02201 001-072-510-00	1
図書 DOCUMENT			
ｺｰｼｮﾝｼｰﾄ(英) CAUTION SHEET (EN)	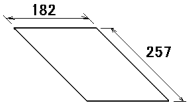	E52-00002-* 000-809-015-1*	1
取扱説明書(英) OPERATOR'S MANUAL	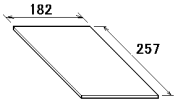	OME-56290-* 000-809-000-1*	1

型式/ｺｰﾄﾞ番号が2段の場合、下段より上段に代わる過渡期品であり、どちらかが入っています。 なお、品質は変わりません。

TWO TYPES AND CODES MAY BE LISTED FOR AN ITEM. THE LOWER PRODUCT MAY BE SHIPPED IN PLACE OF THE UPPER PRODUCT. QUALITY IS THE SAME.

（略図の寸法は、参考値です。 DIMENSIONS IN DRAWING FOR REFERENCE ONLY.）

PACKING LIST

NX-300-N-D

A-2

NAME	OUTLINE	DESCRIPTION/CODE No.	Q'TY
ユニット UNIT			
ﾅﾌﾞﾃｯｸｽ受信機 NAVTEX RECEIVER	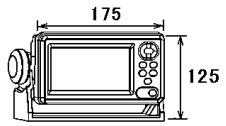	NX-300-D 000-015-918-00	1
予備品 SPARE PARTS			
予備品 SPARE PARTS		SP08-02401 001-072-500-00	1
付属品 ACCESSORIES			
付属品 ACCESSORIES		FP14-02801 001-057-060-00	1
工事材料 INSTALLATION MATERIALS			
ｹｰﾌﾞﾙ組品MJ CABLE ASSY.	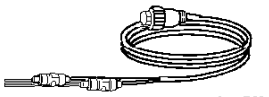	MJ-A7SPF0009-020C 000-159-686-10	1
工事材料 INSTALLATION MATERIALS		CP08-02201 001-072-510-00	1
図書 DOCUMENT			
ｺｰｼｮﾝｼｰﾄ(英) CAUTION SHEET (EN)	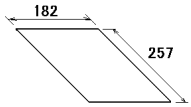	E52-00002-* 000-809-015-1*	1
取扱説明書(英) OPERATOR'S MANUAL	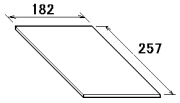	OME-56290-* 000-809-000-1*	1

型式/ｺｰﾄﾞ番号が2段の場合、下段より上段に代わる過渡期品であり、どちらかが入っています。 なお、品質は変わりません。

TWO TYPES AND CODES MAY BE LISTED FOR AN ITEM. THE LOWER PRODUCT MAY BE SHIPPED IN PLACE OF THE UPPER PRODUCT. QUALITY IS THE SAME.

(略図の寸法は、参考値です。 DIMENSIONS IN DRAWING FOR REFERENCE ONLY.)

FURUNO

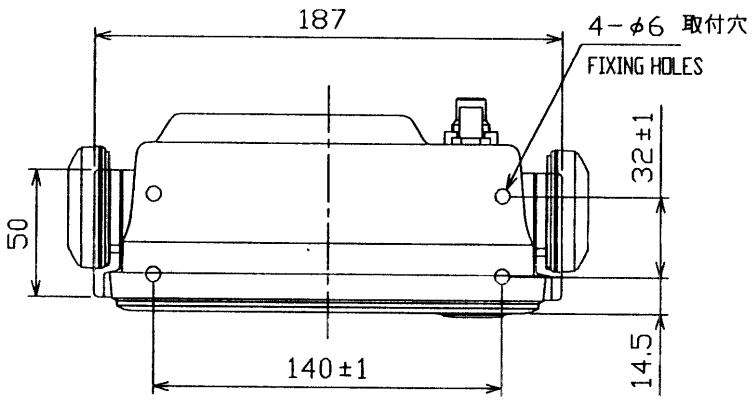

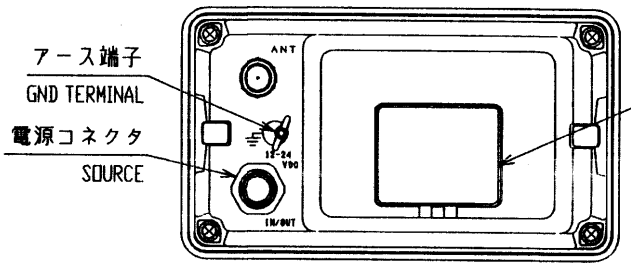

寸法区分（mm） DIMENSION	公差（mm） TOLERANCE
L≦50	±1.5
50<L≦100	±2.5
100<L≦500	±3

表 1
TABLE 1

矢視A VIEW A

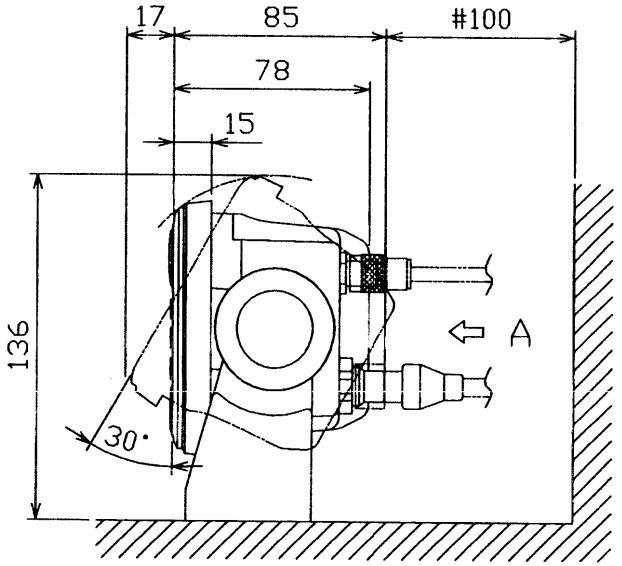

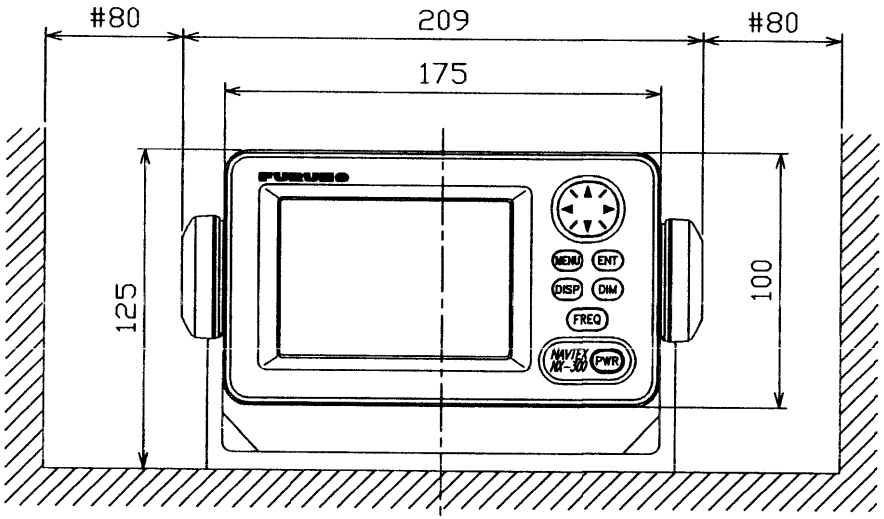

注　記
1）装備ケーブルはサービス時、本体を前方に十分引き出せるよう余裕を持たせること。
2）取付用ネジはトラスタッピングネジ呼び径5×20を使用のこと。
3）指定外寸法公差は表1による。
4）#印寸法は最小サービス空間寸法とする。

NOTE
1. KEEP SUFFICIENT CABLE LENGTH BIHIND THE UNIT.
2. USE TAPPING SCREWS 5 x 20 FOR FIXING THE UNIT.
3. TABLE 1 INDICATES TOLERANCE OF DIMENSIONS.
4. #: RECOMMENDED SERVICE CLEARANCE.

DRAWN May 9 '01 T.YAMASAKI		TITLE	NX-300-D
CHECKED May 10 '01 Y.		名 称	受信機（卓上装備）
APPROVED May 10 '01 S.			外寸図
SCALE 1/3	MASS 0.68 ±10% kg	NAME	RECEIVER UNIT (DESKTOP MOUNT)
DWG.No. C5629-G01- B	08-021-101G-0		OUTLINE DRAWING

FURUNO ELECTRIC CO., LTD.

D-1

FURUNO

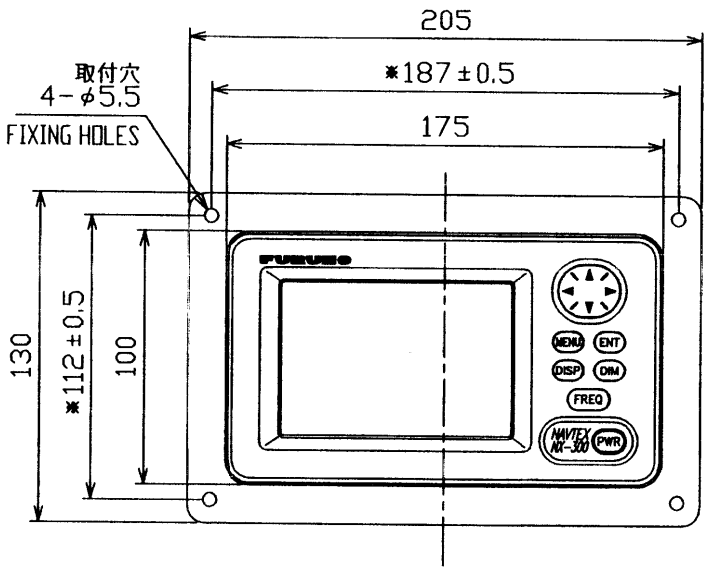

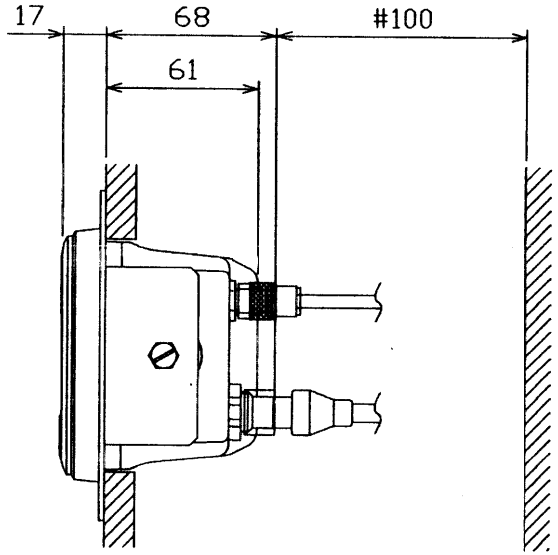

寸法区分（mm） DIMENSION	公差（mm） TOLERANCE
L≦50	±1.5
50<L≦100	±2.5
100<L≦500	±3

表 1
TABLE 1

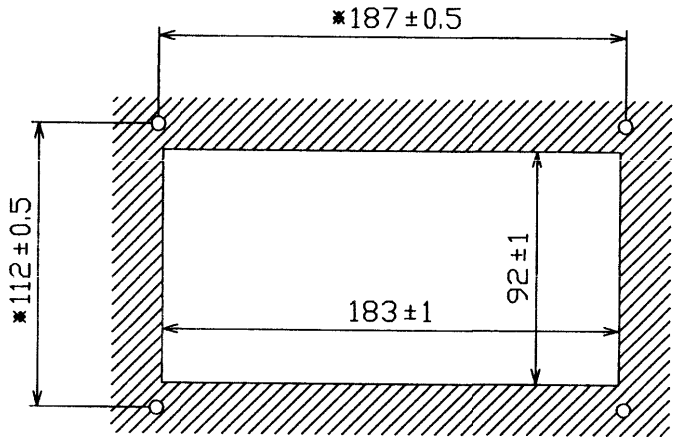

取付穴寸法図（参考図）
CUTOUT DIMENSIONS

注　記　1）　*印寸法は取付穴位置寸法とする。
2）　取付用ネジはタッピングネジ呼び径5×20を使用のこと。
3）　指定外の寸法公差は表1による。
4）　#印寸法は最小サービス空間寸法とする。

NOTE
1. '*' INDICATES DIMENSION OF FIXING HOLES PITCH.
2. USE TAPPING SCREWS 5 x 20 FOR FIXING THE UNIT.
3. TABLE 1 INDICATES TOLERANCE OF DIMENSIONS.
4. #: RECOMMENDED SERVICE CLEARANCE.

DRAWN May 9 '01 T.YAMASAKI		TITLE NX-300-D
CHECKED May 10 '01 Y.Kimura		名　称 受信機（埋込装備F）
APPROVED May 10 '01 S.Yoshi		外寸図
SCALE 1/3 MASS 0.67 kg ±10%		NAME RECEIVER UNIT (FLUSH MOUNT F)
DWG.No. C5629-G03- B	08-021-111G-0	OUTLINE DRAWING

FURUNO ELECTRIC CO., LTD.

FURUNO

寸法区分（mm） DIMENSION	公差（mm） TOLERANCE
L≦50	±1.5
50<L≦100	±2.5
100<L≦500	±3

表 1
TABLE 1

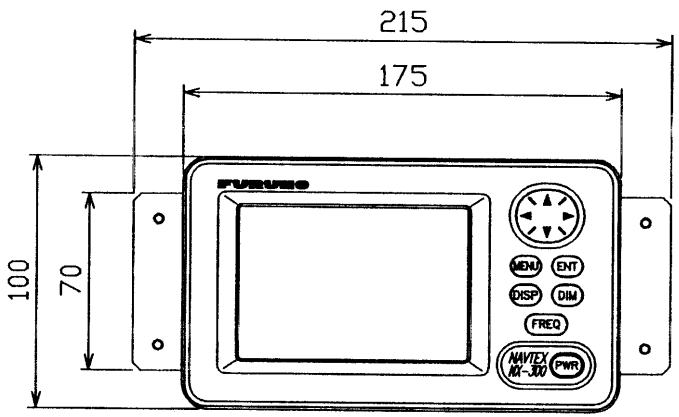

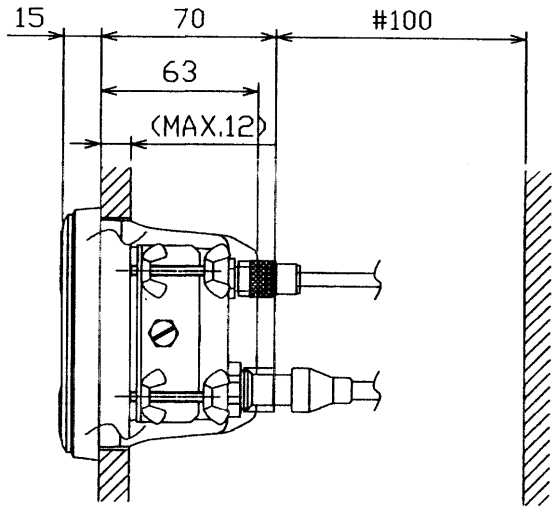

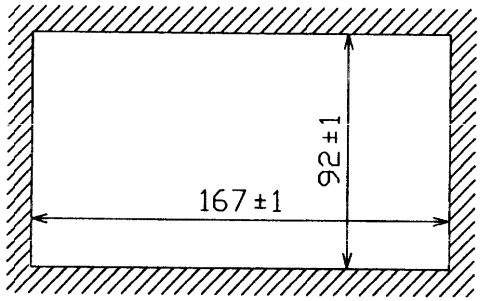

取付穴寸法図（参考図）
CUTOUT DIMENSIONS

注　記　1）　指定外の寸法公差は表1による。
　　2）　#印寸法は最小サービス空間寸法とする。

NOTE　1.　TABLE 1 INDICATES TOLERANCE OF DIMENSIONS.
　　2.　#: RECOMMENDED SERVICE CLEARANCE.

DRAWN May 9 '01 T.YAMASAKI		TITLE	NX-300-D
CHECKED May 10 '01 Y. Kimi		名　称	受信機（埋込装備S）
APPROVED May 10 '01 S. Yoshimura			外寸図
SCALE 1/3	MASS 0.69 ±10% kg	NAME	RECEIVER UNIT (FLUSH MOUNT S)
DWG.No. C5629-G04- B	08-021-121G-0		OUTLINE DRAWING

FURUNO ELECTRIC CO., LTD.

A)マストへの取付け　MAST MOUNTING

a)マスト取付金具CP20-01111(工事材料)でマストに固定する。
USE MAST MOUNTING KIT CP20-01111.

b)パイプのみを使うとき
USE A PIPE ONLY.

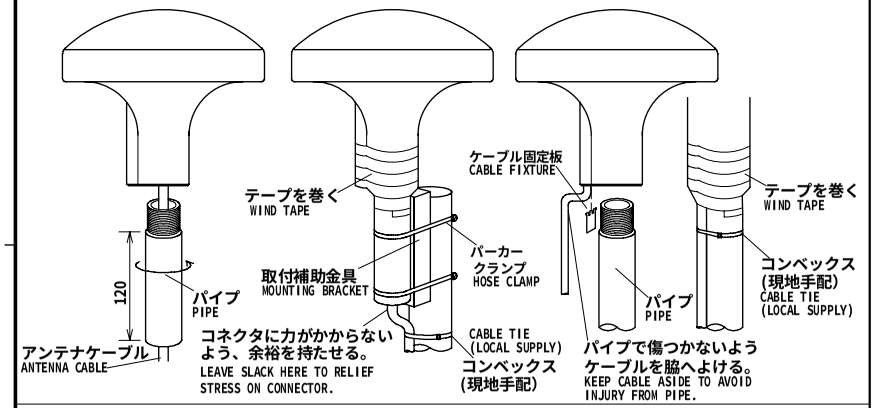

B)スタンションやパルピットにつけるとき　HANDRAIL MOUNTING

レール用アンテナベース No.13-RC5160 (取付可能レール直径：φ19～φ32)
(コード番号：000-806-114)

USE HANDRAIL MOUNTING BASE No.13-RC5160
(CODE No.000-806-114, OPTION).
THE DIAMETER OF THE HANDRAIL SHOULD BE FROM
φ19mm TO φ32mm.

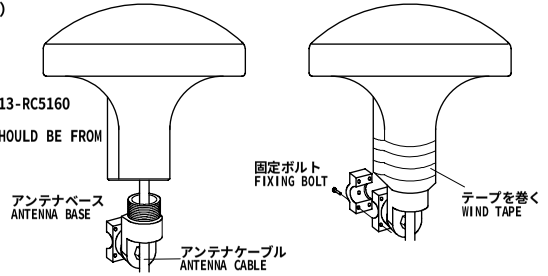

注記 1) パイプ(アンテナベース)はアンテナユニットにねじ込んだ後に固定する。
2) アンテナを固定するときはパイプ（アンテナベース）をアンテナにねじ込むこと。
アンテナ側をねじるとコネクタ部やケーブルに無理がかかり、故障の原因となる。

NOTE 1. FASTEN PIPE(ANTENNA BASE) TO ANTENNA UNIT FIRST THEN FIX THEM TO MAST OR HANDRAIL.
2. WHEN FIXING ANTENNA, TURN PIPE OR ANTENNA BASE; NOT THE ANTENNA.
TURNING THE ANTENNA MAY TWIST THE CABLE AND PLACE STRESS ON CONNECTOR.

C)取付ける場所が傾斜しているとき　ANTENNA BASE MOUNTING

オプションのアンテナベースを使う。
USE OPTIONAL ANTENNA BASE No.13-QA330/QA310.

傾斜 INCLINATION	-5° - 33°	32° - 65°	65° - 98°
装備方法 MOUNTING METHOD	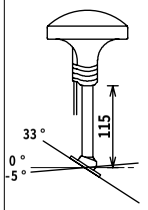	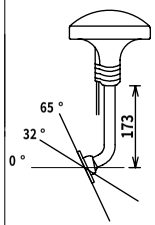	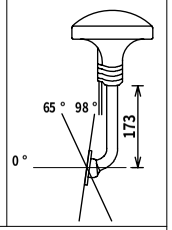
アンテナベース型式 ANTENNA BASE TYPE	直型アンテナベース RIGHT ANGLE ANTENNA BASE No.13-QA330	L型アンテナベース L-TYPE ANTENNA BASE No.13-QA310	
コード番号 CODE No.	000-803-239	000-803-240	

アンテナベース基部
MOUNTING DIMENSIONS OF ANTENNA BASE

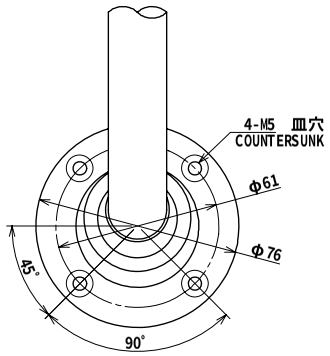

表 1　TABLE 1

寸法区分(mm) DIMENSIONS	公差(mm) TOLERANCE
0 ＜ L ≦ 50	±1.5
50 ＜ L ≦ 100	±2.5
100 ＜ L ≦ 500	±3

表 2　TABLE 2

型式 TYPE	質量(kg) MASS(±10%)
NX-3H-D(NX-300)	0.94
NX-7H(NX-700)	0.6

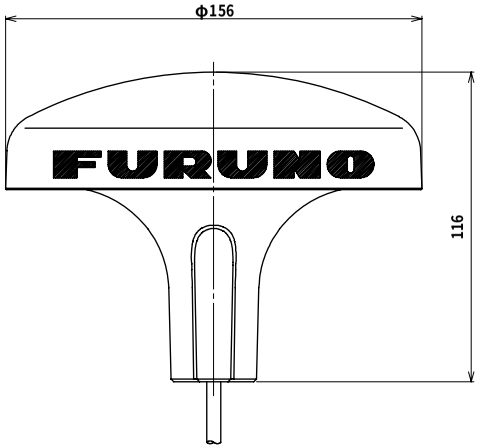

1-14UNS1B
ねじ山数(25.4mmにつき)： 14
ピッチ： 1.8143 mm
オネジ有効長さ： 15.17 mm
オネジ有効径： 24.17 mm

THREAD PER 25.4mm (1 INCH): 14
PITCH: 1.8143 mm
THREAD LENGTH: 15.17 mm
PITCH DIAMETER: 24.17 mm

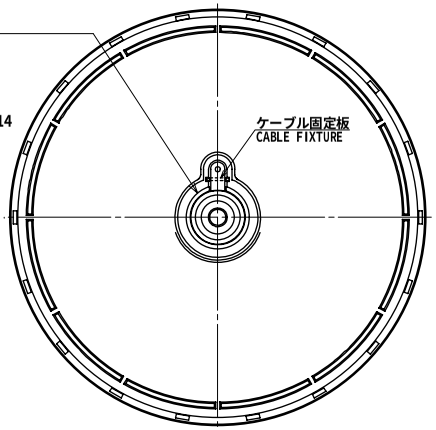

取付位置
MOUNTING LOCATION

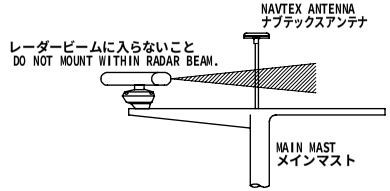

注記　1) 指定外の寸法公差は表1による。
NOTE　1. TABLE 1 INDICATES TOLERANCE OF DIMENSIONS WHICH IS NOT SPECIFIED.

DRAWN Oct. 13, '05 E.MIYOSHI		TITLE	NX-3H-D/NX-7H
CHECKED TAKAHASHI.T		名称	空中線部/アンテナ部
APPROVED Y. Hatai	NX-700 NX-300		外寸図
SCALE 1/2 MASS 表2参照 SEE TABLE 2.	質量は10mケーブルを含む。 MASS W/ 10m CABLE.	NAME	ANTENNA UNIT
DWG. No. C5629-G05- F	08-021-310G- 1		OUTLINE DRAWING

FURUNO

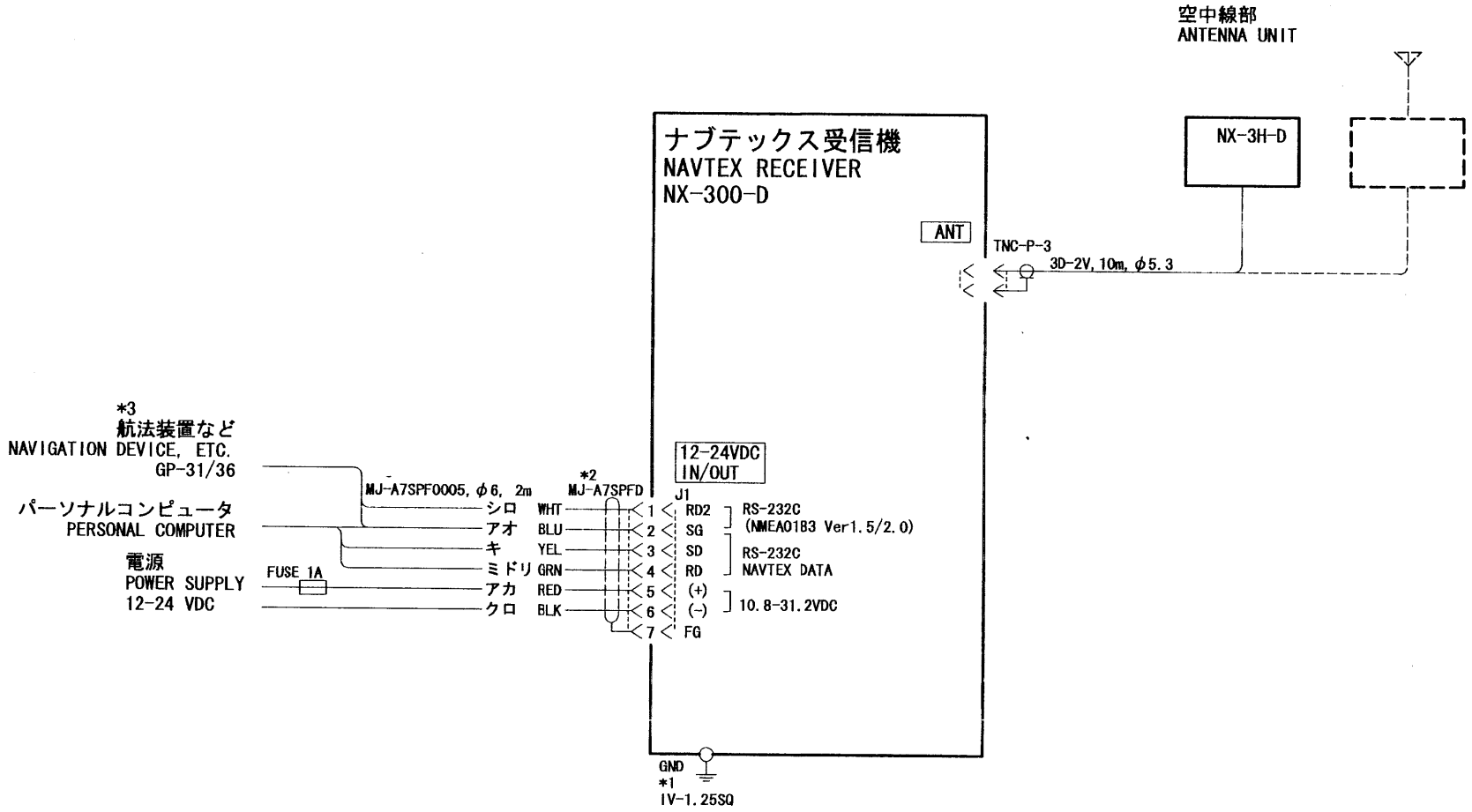

注記
＊1）現地手配。
＊2）コネクタは工場にて取付済み。
＊3）RC-232C以外のフォーマットの場合は
　　レベル変換器が必要。

NOTE
*1. LOCAL SUPPLY.
*2. CONNECTOR FITTED AT FACTORY.
*3. LEVEL CONVERTER REQUIRED FOR FORMAT OTHER
THAN RS-232C.

DRAWN May. 9 '01 T. YAMASAKI			TITLE NX-300
CHECKED May 10 '01 Y. Kima			名称 ナブテックス受信機
APPROVED May 10 '01 S. Yoshimura			相互結線図
SCALE	MASS kg		NAME NAVTEX RECEIVER
DWG. No. C5629-C01- C			INTERCONNECTION DIAGRAM

FURUNO ELECTRIC CO., LTD.

INDEX

A

All clear 4-1

AUTO 1-3

AUTO mode 2-3

AUTO-FAST 2-6

AUTO-SLOW 2-6

B

BATTERY icon 1-3, 5-2

C

Contrast 2-2

Control panel 2-1

D

Data sentence 6-4

Default setting 3-3

Deleting all messages 3-4

DEMO mode 4-1

Dimmer 2-2

E

ERROR RATE 2-5

F

FUNCTIONS menu 2-5

G

Grounding 6-4

I

Installation 6-1

K

KEY BEEP 2-5

L

Language menu 2-9

LCD check 5-2

Local time 3-2

M

Main menu 2-2

Maintenance 5-1

MANUAL mode 2-3

Message selection 2-4

Mounting 6-1

N

Navarea 1-1

Navigation data display 2-11, 3-4

NAVTEX area 1-1

NEW 1-3

O

Omnipad 2-1

P

Power on/off 2-1

Program version no. 5-2

R

RCV ALARM 2-5

RCV NOTIFY 2-5

Rx 1-3

S

SAR 1-3

Saving to PC 2-6

Scroll bar 1-3

SCROLLING 2-6

SKIP-$$ 2-6

Start code 1-2

Station list 1-5

Station map 1-4

Station selection 2-3

SYSTEM MENU 3-1

T

Termination code 1-2

TEST 5-1

TIME DIFF 3-2

Time difference 3-2

TIME DISP 3-3

Type of message 1-2

U

Units of measurement 3-1

User display 3-4

V

Version no. 2-1

VIEW mode 4-1

W

WARNING 1-3

Wiring 2-6, 6-3

FURUNO Worldwide Warranty for Pleasure Boats (Except North America)

This warranty is valid for products manufactured by Furuno Electric Co. (hereafter FURUNO) and installed on a pleasure boat. Any web based purchases that are imported into other countries by anyone other than a FURUNO certified dealer may not comply with local standards. FURUNO strongly recommends against importing these products from international websites as the imported product may not work correctly and may interfere with other electronic devices. The imported product may also be in breach of the local laws and mandated technical requirements. Products imported into other countries as described previously shall not be eligible for local warranty service.

For products purchased outside of your country please contact the national distributor of Furuno products in the country where purchased.

This warranty is in addition to the customer´s statutory legal rights.

1. Terms and Conditions of Warranty

FURUNO guarantees that each new FURUNO product is the result of quality materials and workmanship. The warranty is valid for a period of 2 years (24 months) from the date of the invoice, or the date of commissioning of the product by the installing certified dealer.

2. FURUNO Standard Warranty

The FURUNO standard warranty covers spare parts and labour costs associated with a warranty claim, provided that the product is returned to a FURUNO national distributor by prepaid carrier.

The FURUNO standard warranty includes:

- Repair at a FURUNO national distributor
- All spare parts for the repair
- Cost for economical shipment to customer

3. FURUNO Onboard Warranty

If the product was installed/commissioned and registered by a certified FURUNO dealer, the customer has the right to the onboard warranty.

The FURUNO onboard warranty includes

- Free shipping of the necessary parts
- Labour: Normal working hours only
- Travel time: Up to a maximum of two (2) hours
- Travel distance: Up to a maximum of one hundred and sixty (160) KM by car for the complete journey

4. Warranty Registration

For the Standard Warranty - presentation of product with serial number (8 digits serial number, 1234-5678) is sufficient. Otherwise, the invoice with serial number, name and stamp of the dealer and date of purchase is shown.

For the Onboard Warranty your FURUNO certified dealer will take care of all registrations.

5. Warranty Claims

For the Standard Warranty - simply send the defective product together with the invoice to a FURUNO national distributor.
For the Onboard Warranty – contact a FURUNO national distributor or a certified dealer. Give the product´s serial number and describe the problem as accurately as possible.

Warranty repairs carried out by companies/persons other than a FURUNO national distributor or a certified dealer is not covered by this warranty.

6. Warranty Limitations

When a claim is made, FURUNO has a right to choose whether to repair the product or replace it.

The FURUNO warranty is only valid if the product was correctly installed and used. Therefore, it is necessary for the customer to comply with the instructions in the handbook. Problems which result from not complying with the instruction manual are not covered by the warranty.

FURUNO is not liable for any damage caused to the vessel by using a FURUNO product.

The following are excluded from this warranty:

a. Second-hand product

b. Underwater unit such as transducer and hull unit

c. Routine maintenance, alignment and calibration services.

d. Replacement of consumable parts such as fuses, lamps, recording papers, drive belts, cables, protective covers and batteries.

e. Magnetron and MIC with more than 1000 transmitting hours or older than 12 months, whichever comes first.

f. Costs associated with the replacement of a transducer (e.g. Crane, docking or diver etc.).

g. Sea trial, test and evaluation or other demonstrations.

h. Products repaired or altered by anyone other than the FURUNO national distributor or an authorized dealer.

i. Products on which the serial number is altered, defaced or removed.

j. Problems resulting from an accident, negligence, misuse, improper installation, vandalism or water penetration.

k. Damage resulting from a force majeure or other natural catastrophe or calamity.

l. Damage from shipping or transit.

m. Software updates, except when deemed necessary and warrantable by FURUNO.

n. Overtime, extra labour outside of normal hours such as weekend/holiday, and travel costs above the 160 KM allowance

o. Operator familiarization and orientation.

FURUNO Electric Company, March 1, 2011

FURUNO Warranty for North America

FURUNO U.S.A., Limited Warranty provides a twenty-four (24) months LABOR and twenty-four (24) months PARTS warranty on products from the date of installation or purchase by the original owner. Products or components that are represented as being waterproof are guaranteed to be waterproof only for, and within the limits, of the warranty period stated above. The warranty start date may not exceed eighteen (18) months from the original date of purchase by dealer from Furuno USA and applies to new equipment installed and operated in accordance with Furuno USA's published instructions.

Magnetrons and Microwave devices will be warranted for a period of 12 months from date of original equipment installation.

Furuno U.S.A., Inc. warrants each new product to be of sound material and workmanship and through its authorized dealer will exchange any parts proven to be defective in material or workmanship under normal use at no charge for a period of 24 months from the date of installation or purchase.

Furuno U.S.A., Inc., through an authorized Furuno dealer will provide labor at no cost to replace defective parts, exclusive of routine maintenance or normal adjustments, for a period of 24 months from installation date provided the work is done by Furuno U.S.A., Inc. or an AUTHORIZED Furuno dealer during normal shop hours and within a radius of 50 miles of the shop location.

A suitable proof of purchase showing date of purchase, or installation certification must be available to Furuno U.S.A., Inc., or its authorized dealer at the time of request for warranty service.

This warranty is valid for installation of products manufactured by Furuno Electric Co. (hereafter FURUNO). Any purchases from brick and mortar or web-based resellers that are imported into other countries by anyone other than a FURUNO certified dealer, agent or subsidiary may not comply with local standards. FURUNO strongly recommends against importing these products from international websites or other resellers, as the imported product may not work correctly and may interfere with other electronic devices. The imported product may also be in breach of the local laws and mandated technical requirements. Products imported into other countries, as described previously, shall not be eligible for local warranty service.

For products purchased outside of your country please contact the national distributor of Furuno products in the country where purchased.

WARRANTY REGISTRATION AND INFORMATION

To register your product for warranty, as well as see the complete warranty guidelines and limitations, please visit www.furunousa.com and click on "Support". In order to expedite repairs, warranty service on Furuno equipment is provided through its authorized dealer network. If this is not possible or practical, please contact Furuno U.S.A., Inc. to arrange warranty service.

FURUNO U.S.A., INC.
Attention: Service Coordinator
4400 N.W. Pacific Rim Boulevard
Camas, WA 98607-9408
Telephone: (360) 834-9300
FAX: (360) 834-9400

Furuno U.S.A., Inc. is proud to supply you with the highest quality in Marine Electronics. We know you had several choices when making your selection of equipment, and from everyone at Furuno we thank you. Furuno takes great pride in customer service.

FURUNO ELECTRIC CO., LTD.
9-52 Ashihara-cho, Nishinomiya, 662-8580, Japan
Tel: +81 (798) 65-2111 Fax: +81 (798) 65-4200
www.furuno.co.jp

Publication No. DOCQA0185

Declaration of Conformity

CE

We FURUNO ELECTRIC CO., LTD.

(Manufacturer)

9-52 Ashihara-Cho, Nishinomiya City, 662-8580, Hyogo, Japan

(Address)

declare under our sole responsibility that the product

NAVTEX RECEIVER NX-300

(Model name, type number)

is in conformity with the essential requirements as described in the Directive 1999/5/EC of the European Parliament and of the Council of 9 March 1999 on radio equipment and telecommunications terminal equipment (R&TTE Directive) and meets the relevant parts of the following standards for the intended usage of this equipment

EN 300 065-1 V1.2.1: 2009 Spurious related items
IEC 60945 Ed.4.0: 2002 EMC related items
IEC 60950-1 Ed.2.0: 2005 Safety related items
IEC 60950-1 Ed.2.0 A1: 2009 Safety related items

(title and/or number and date of issue of the standard(s) or other normative document(s))

For assessment, see

- EMC and Spurious Test Report FLI 12-09-088, January 22, 2010 prepared by FURUNO Labotech International Co., LTD.
- Safety Test Report FLI 12-10-059, November 12, 2010 prepared by FURUNO Labotech International Co., LTD.

On behalf of Furuno Electric Co., Ltd.

Takahiko Kusuda
Manager, QMS Secretariat
Quality Assurance Department

Nishinomiya City, Japan
December 9, 2010

(Place and date of issue)

(name and signature or equivalent marking of authorized person)